Wide-Lite
1611 clovis r. barker road ■ san marcos, tx ■ 78666 ■ ph: 512.392.5821 ■ fax: 512.753.1122

VIZORLED
LED SOLUTIONS

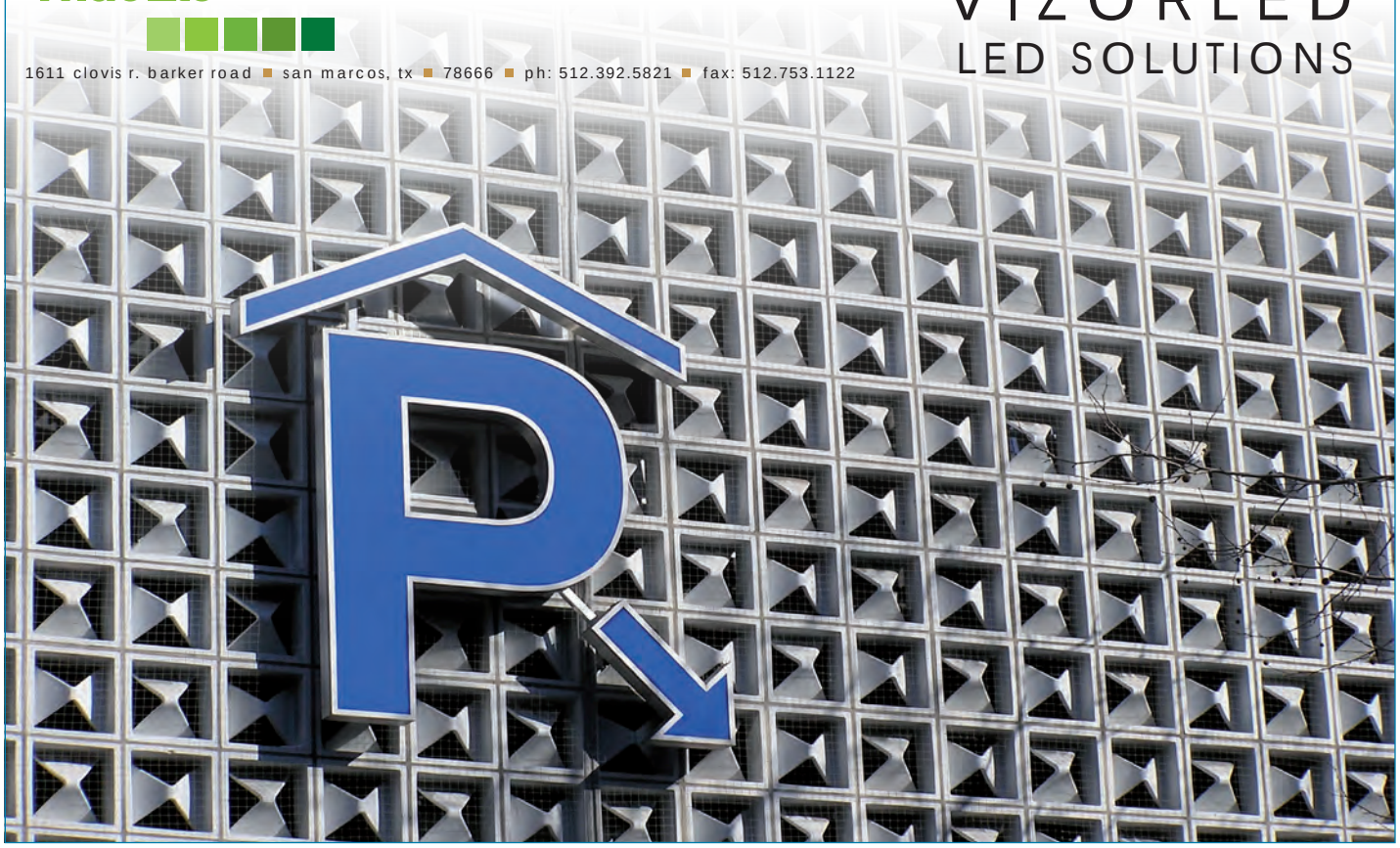

LIGHTFAIR INTERNATIONAL
The future. Illuminated.
2009

WINNER
INNOVATION AWARDS
BEST OF CATEGORY 2009
ROADWAY, SPORTS, OUTDOOR ARCHITECTURAL, SITE LIGHTING

VizorLED
LED SOLUTIONS

FEATURES & BENEFITS

- Industry's first non-direct view LED solution for parking and under canopy applications.
  - Significantly reduces direct glare and brightness, while increasing overall visual comfort and safety.
  - Competitors use LEDs in the direct line-of-sight, resulting in extreme glare and low visual acuity.
- High-lumen white LEDs combined with precision engineered optics and premium materials for unrivaled performance.
  - Photometrics meet current 150W metal halide specifications, while exceeding competitor LED product performance.
- Green friendly system reduces total power draw 28 - 60% compared to a traditional 150W PSMH system.
- Cradle to Cradle (C2C) product recycling assistance program available to minimize environmental impact at end of product life cycle.
- Extremely efficacious system with efficacy of 65 lumens per watt (60 LED VZ24 unit) with up to 5% uplight.
- Proximo™ occupancy detector optional for additional energy savings up to 94% during unoccupied periods.
- Optional colored drive-lane lenses to provide visual floor / level designation.
- Modular design allows for easy field replacement of boards and electrical gear for upgrades and maintenance.

VIZORLED
ORDER FORM

LIGHTFAIR INTERNATIONAL 2009 — WINNER INNOVATION AWARDS BEST OF CATEGORY 2009 — ROADWAY, SPORTS, OUTDOOR ARCHITECTURAL, SITE LIGHTING

WideLite®

DIMENSIONS

VZ24

EZ Hanger Plate Mount
(standard mounting)

Top View

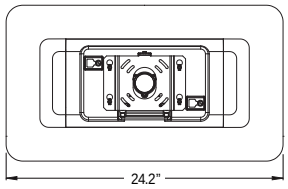

End View

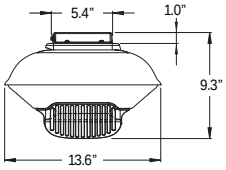

Side View

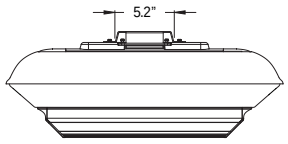

VZ38

EZ Hanger Plate Mount
(standard mounting)

Top View

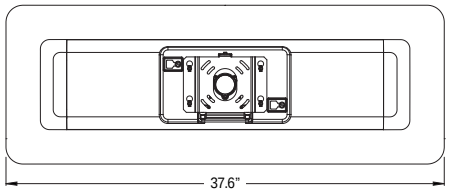

End View

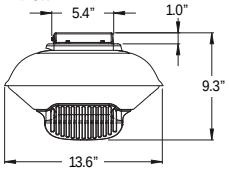

Side View

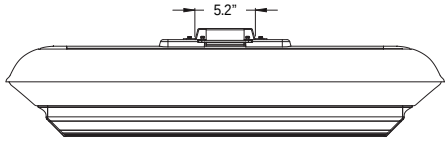

TECHNICAL DATA (Based on standard driver, Rated Life 60,000 hrs. 4250K +/- 250K CCT *standard, contact factory for additional CCTs*)

	100 LED VZ38 Unit *	50 LED VZ38 Unit	60 LED VZ24 Unit *	30 LED VZ24 Unit
Total System Watts	120W	131W	69W	75W
Initial Lumens @ 25°C Ambient	7526 @ 350mA	6603 @ 700mA	4458 @ 350mA	3927 @ 700mA
Lumens per Watt @ 25°C Ambient	63	50	65	52
Initial Lumens @ 40°C Ambient	7194 @ 350mA	6261 @ 700mA	4316 @ 350mA	3756 @ 700mA
Lumens per Watt @ 40°C Ambient	60	48	63	50
Initial Lumens @ 50°C Ambient	7035 @ 350mA	6157 @ 700mA	4220 @ 350mA	3675 @ 700mA
Lumens per Watt @ 50°C Ambient	59	47	61	49

* Meets current ENERGY STAR guidelines

Note: Due to LED forward voltage variations, total system watts could vary +/-5%.

Typical VizorLED Candela Curves

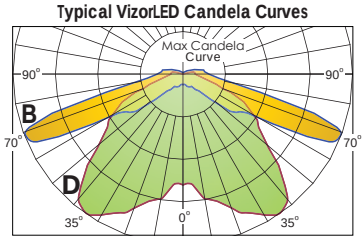

Note: Provides up to 5% Uplight

ORDERING INFORMATION

SERIES/SIZE	# of LEDs	DISTRIBUTION	VOLTAGE	MOUNTING	OPTIONS	FINISH	ACCESSORIES
						ASA	
VZ24	30	B	120	EZ	F1		F1-KIT
	60	D	208	EZBP	F2		F2-KIT
			240	PND-RC	CL(XX)*		C2C
VZ38	50		277	PND-RC-24LDS	CE		
	100			TW2	DD		
				Y	PX*		

SERIES/SIZE

- ☐ VZ24
- ☐ VZ38

of LEDs

- ☐ 30
- ☐ 60
- ☐ 50
- ☐ 100

DISTRIBUTION

- ☐ B Bi-Axial Symmetric
- ☐ D Downlight

(see polar curves above for details)

VOLTAGE

- ☐ 120
- ☐ 208
- ☐ 240
- ☐ 277

MOUNTING

- ☐ EZ Easy Hanger Plate (standard)
- ☐ EZBP Bulk Pack Easy Hanger Plate
- ☐ PND-RC Pendant Mount (to Rigid Conduit)
- ☐ PND-RC-24LDS Pendant Mount w/ 24" leads
- ☐ TW2 Thru-Wire Provision
- ☐ Y Yoke Mount

OPTIONS

- ☐ F1 Single Fuse (120/277V)
- ☐ F2 Double Fuse (208/240V)
- ☐ CL(XX)* Colored Drive Lane Lenses
  RD - red, BL - blue, YL - yellow,
  OR - orange, PP - purple,
  PK - pink, GR - green
  *(contact factory for additional color options)
- ☐ CE Chromed End Caps
- ☐ DD Dimming Driver (0-10V)
- ☑ PX* Proximo Occupancy Detector
  * (contact factory for available % dimming, minimum level 10%)

FINISH

- ☑ ASA Anodized Satin Aluminum

ACCESSORIES

- ☐ F1-KIT Single Inline Fuse Kit (120/277V)
- ☐ F2-KIT Double Inline Fuse Kit (208/240V)
- ☐ C2C Cradle to Cradle Product Recycling Assistance Program

Wide-Lite is a Philips group brand
1611 Clovis Barker Road
San Marcos, TX 78666-5177
Phone: 512.392.5821
Fax: 512.753.1122

Wide-Lite reserves the right to change specifications and dimensions without notice.
Lamp and electrical specifications / availability subject to change by manufacturer without notice.
Please refer to detailed specification sheets for additional information and spec details.

Bulletin No. WLSP0280A0509

VZ Series

VizorLED Parking Garage Luminaire

Type:

Job:

Catalog Number:

	-	-	-	-	- BL-PCB	- ASA	
SERIES/SIZE	# of LEDs	DISTRIBUTION	VOLTAGE	MOUNTING	OPTIONS (FACTORY INSTALLED)	FINISH	ACCESSORIES (FIELD INSTALLED)

Approvals:

Date:

Overall Dimensions

For Reference Only

VZ24

EZ Hanger Plate Mount
(standard mounting)
(mounts to standard 4" square or octagonal j-boxes)

Weight: 28 lbs. (12.7 kg)

Top View

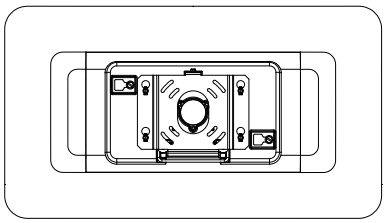

End View

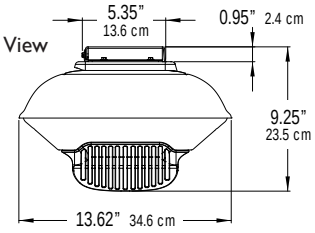

Side View

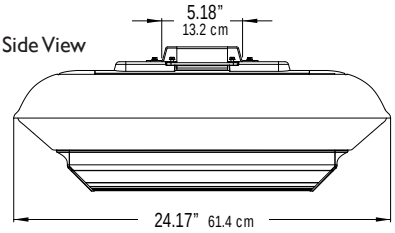

VZ38

EZ Hanger Plate Mount
(standard mounting)
(mounts to standard 4" square or octagonal j-boxes)

Weight: 42 lbs. (19.1 kg)

Top View

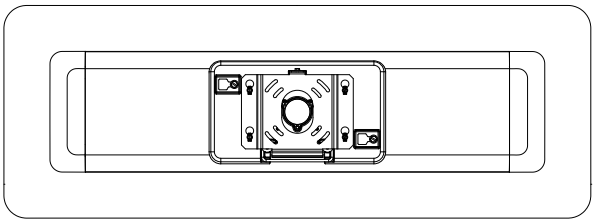

End View

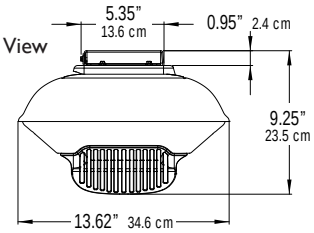

Side View

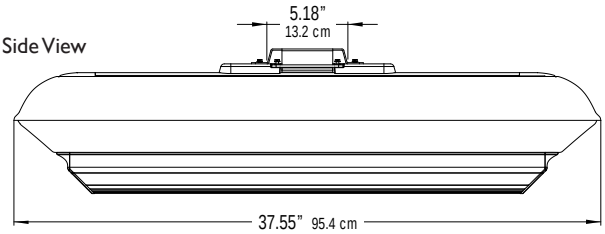

Specifications

Rated Life

60,000 hours.

Construction

Heavy duty extruded heatsink, 6063-T5, optimally engineered / designed via fin length and fin spacing to achieve thermal resistance < 0.18°C per watt. Two die-cast endcaps, 380 alloy. Thermoformed canopy top transition housing. Extruded main top housing driver heatsink, 6063-T5. Standard unit constructed to IP65.

Non-Direct View™ (NDV™) LED Optics

Faceted MIRO reflector (minimum 94% reflectivity). Designed around Lumiled Rebel LED light source.

Driver

High power factor (>90% standard, >86% dimming). Constant current: 350mA and 700mA. Voltage: 120-277. Temperature range: -30°C (-22°F) to 50°C (122°F). Open / short circuit protection. Optional 0-10V pulse width modulation dimming down to 10% power. Off-state power consumption is 0.0 watts. RoHS compliant.

LED and Board Array

Lumiled Rebel. LED only: 100 lumens per watt, System only: 47-65 lumens per watt. See technical data for details. Color temperature: 4250K +/- 250K. Aluminum metal clad board. Thermal resistance (Board to Heatsink): <1.5°C per watt. RoHS compliant.

Mounting

Heavy duty top casting, 380 alloy. Standard mounting shall include a galvanized steel Easy Hanger Plate, (Bulk Pack available). Alternately, unit may be pendant mounted to rigid conduit (by others), yoke mounted or specified with a through-wire provision.

Finish

Standard finish of die cast endcaps and extruded main top housing driver heatsink shall be Textured Satin Aluminum. Extruded (finned) heatsink has a clear anodized finish. Thermoformed canopy top transition has an embedded matte Satin Aluminum finish.

Colored Lens Option

Colored lenses may be specified for parking level or drive lane identification.

Chromed End Cap Option

As a decorative option, the end caps may be chromed.

Proximo™ Occupancy Detector

Option may be specified for additional energy savings during unoccupied periods.

Cradle to Cradle Recycling

To minimize environmental impact at end of product life cycle, the C2C product recycling assistance program is available.

Listings

UL/cUL Listed luminaire, UL 1598, suitable for Wet Locations. The quality systems of this facility have been registered by UL to the ISO 9001 Series Standards.

Warranty / Terms and Conditions

Standard 5 Year Limited Warranty

Wide-Lite's current Warranty may be found at www.wide-lite.com (keyword: warranty) as well as Wide-Lite's current Standard Terms and Conditions of Sale (keyword: terms).

All sales of items in this catalogue shall be subject to Wide-Lite's Standard Terms and Conditions of Sale current at the time of shipment. If you do not have a copy of Wide-Lite's Warranty and Standard Terms, please contact the factory for same prior to ordering.

(view from drive lane)

VZ38

VZ24

LIGHTFAIR INTERNATIONAL The future. Illuminated. 2009

WINNER INNOVATION AWARDS BEST OF CATEGORY 2009 ROADWAY, SPORTS, OUTDOOR ARCHITECTURAL, SITE LIGHTING

Series/Size	# of LEDs	Distribution	Voltage	Mounting	Options	Finish
❒ **VZ24**	❒ **30** ❒ **60**	❒ **B** Bi-Axial Symmetric ❒ **D** Downlight *(see polar curves below for details)*	❒ **120** ❒ **208** ❒ **240** ❒ **277**	❒ **EZ** Easy Hanger Plate *(standard)* ❒ **EZBP** Bulk Pack Easy Hanger Plate ❒ **PND-RC** Pendant Mount *(to Rigid Conduit)* ❒ **PND-RC-24LDS** Pendant Mount with 24" leads ❒ **TW2** Thru-wire Provision ❒ **Y** Yoke Mount	❒ **F1** Single Fuse (120/277V) ❒ **F2** Double Fuse (208/240V) ❒ **CL(XX)**[1] Colored Drive Lane Lenses (XX) = RD - red, BL - blue, YL - yellow, OR - orange, PP - purple, PK - pink, GR - green ❒ **CE** Chromed End Caps ❒ **DD** Dimming Driver ☑ **PX**[2] Proximo™ Occupancy Detector	☑ **ASA** Anodized Satin Aluminum
❒ **VZ38**	❒ **50** ❒ **100**					

Notes

1) Contact factory for additional color options.

2) Contact factory for available % dimming, minimum level 10%.

Accessories (Ordered Separately)

❒ **F1-KIT** Single Inline Fuse Kit (120/277V)

❒ **F2-KIT** Double Inline Fuse Kit (208/240V)

❒ **C2C** Cradle to Cradle Product Recycling Assistance Program

Technical Data

(Based on standard driver, Rated Life 60,000 hrs. 4250K +/- 250K CCT standard, contact factory for additional CCTs)

	100 LED VZ38 Unit *	50 LED VZ38 Unit	60 LED VZ24 Unit *	30 LED VZ24 Unit
Total System Watts	120W	131W	69W	75W
Initial Lumens @ 25°C Ambient	7526 @ 350mA	6603 @ 700mA	4458 @ 350mA	3927 @ 700mA
Lumens per Watt @ 25°C Ambient	63	50	65	52
Initial Lumens @ 40°C Ambient	7194 @ 350mA	6261 @ 700mA	4316 @ 350mA	3756 @ 700mA
Lumens per Watt @ 40°C Ambient	60	48	63	50
Initial Lumens @ 50°C Ambient	7035 @ 350mA	6157 @ 700mA	4220 @ 350mA	3675 @ 700mA
Lumens per Watt @ 50°C Ambient	59	47	61	49

* Meets current ENERGY STAR guidelines

Note: Due to LED forward voltage variations, total system watts could vary +/-5%.

Typical VizorLED Candela Curves

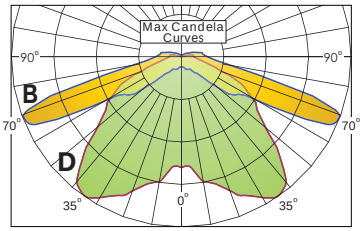

Note: Provides up to 5% Uplight

Mounting Option details

Pendant Mount VZ24

pendant by others
3/4" NPT required

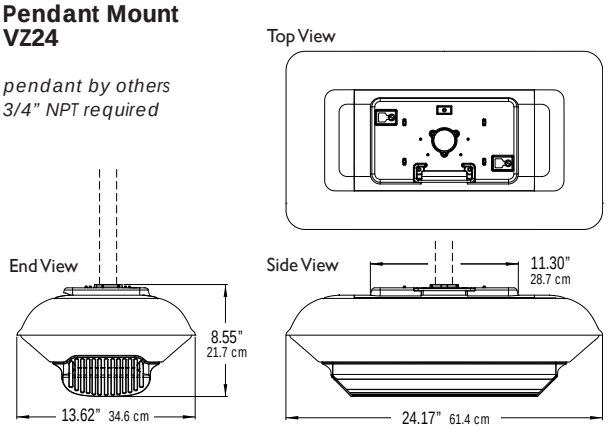

Pendant Mount VZ38

pendant by others
3/4" NPT required

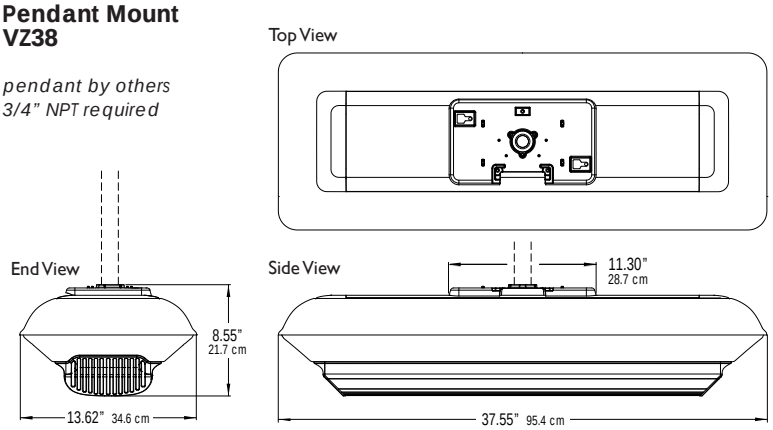

Thru-Wire Provision VZ24

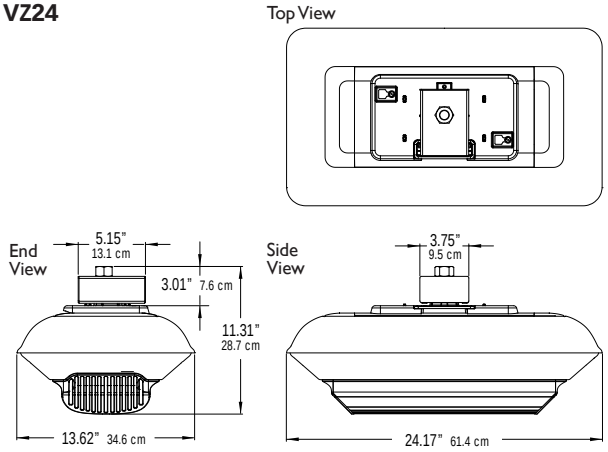

Thru-Wire Provision VZ38

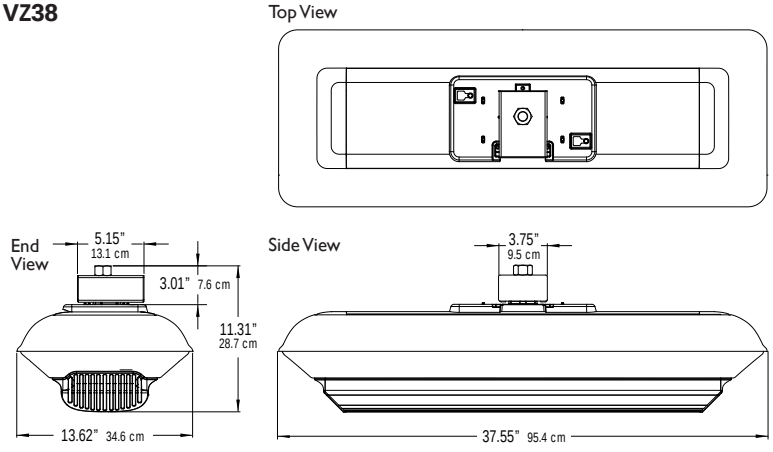

Yoke Mount VZ24

(mounts to standard 4" square or octagonal j-boxes)

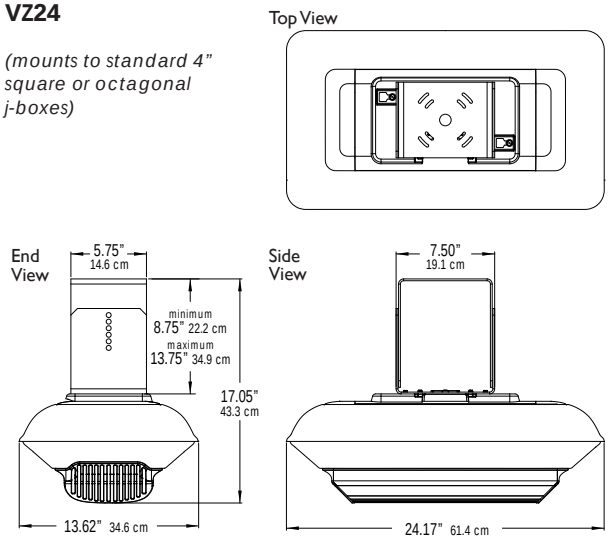

Yoke Mount VZ38

(mounts to standard 4" square or octagonal j-boxes)

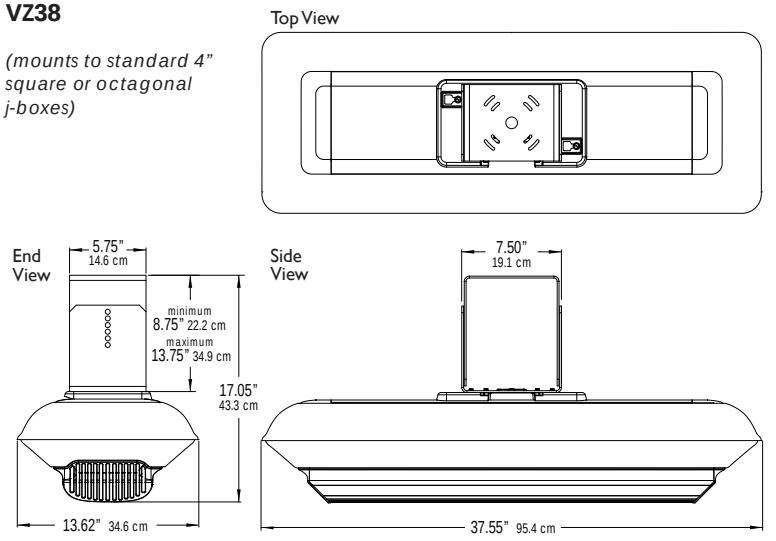

Measured Junction Temperatures (Tj)
VZ38 100 LED Unit & VZ24 60 LED Unit (350mA)

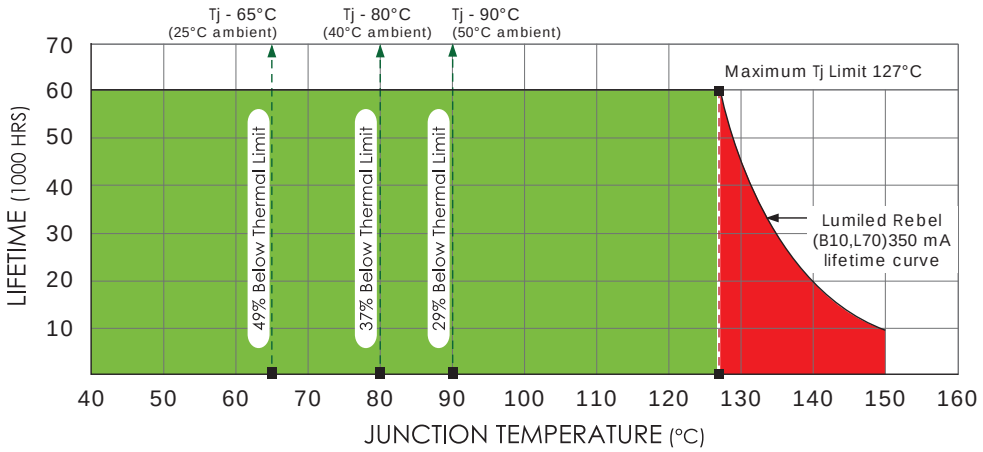

Green shaded portion represents junction temperatures below LED manufacturer's recommended limit to ensure a minimum of 60,000 hours of rated life.

VZ38 100 LED (350mA)

AVERAGE OUTDOOR AMBIENT TEMP	FIXTURE JUNCTION TEMP (Tj)	POTENTIAL LED LIFE EXPECTANCY B10, L70 (hrs)	FIXTURE EFFICACY (lumens / watt)	POTENTIAL LED LIFE EXPECTANCY @ 10 HRS/DAY (yrs)	POTENTIAL LED LIFE EXPECTANCY @ 24 HRS/DAY (yrs)
-30°C / -22°F	10°C	330,000	71	90.4	37.7
-20°C / -4°F	20°C	330,000	69	90.4	37.7
-10°C / 14°F	30°C	330,000	68	90.4	37.7
0°C / 32°F	40°C	325,000	66	89.0	37.1
10°C / 50°F	50°C	310,000	65	84.9	35.4
25°C / 77°F	65°C	250,000	63	68.5	28.5
30°C / 86°F	70°C	245,000	62	67.1	28.0
40°C / 104°F	80°C	210,000	60	57.5	24.0
50°C / 122°F	90°C	170,000	59	46.6	19.4

VZ24 60 LED (350mA)

AVERAGE OUTDOOR AMBIENT TEMP	FIXTURE JUNCTION TEMP (Tj)	POTENTIAL LED LIFE EXPECTANCY B10, L70 (hrs)	FIXTURE EFFICACY (lumens / watt)	POTENTIAL LED LIFE EXPECTANCY @ 10 HRS/DAY (yrs)	POTENTIAL LED LIFE EXPECTANCY @ 24 HRS/DAY (yrs)
-30°C / -22°F	10°C	330,000	74	90.4	37.7
-20°C / -4°F	20°C	330,000	73	90.4	37.7
-10°C / 14°F	30°C	330,000	71	90.4	37.7
0°C / 32°F	40°C	325,000	69	89.0	37.1
10°C / 50°F	50°C	310,000	68	84.9	35.4
25°C / 77°F	65°C	250,000	65	68.5	28.5
30°C / 86°F	70°C	245,000	64	67.1	28.0
40°C / 104°F	80°C	210,000	63	57.5	24.0
50°C / 122°F	90°C	170,000	61	46.6	19.4

Note: Actual LED rated life per the B10,L70 curve is 60,000 hrs. Potential LED life expectency is based on VizorLED's superior thermal management, actual junction temperature (Tj) and projected B10,L70 curves. Projected life in years will be extended even further if used with "DD" or "PX" dimming options.

Measured Junction Temperatures (Tj)
VZ38 50 LED Unit & VZ24 30 LED Unit (700mA)

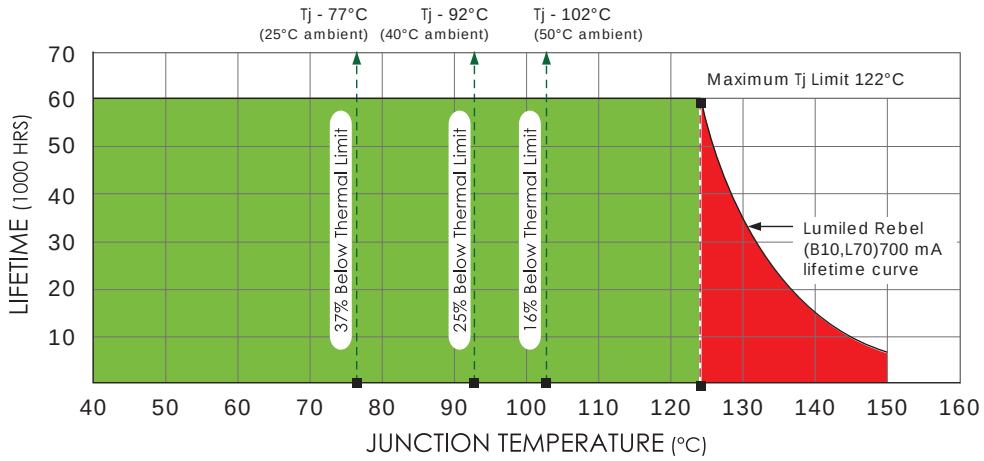

Green shaded portion represents junction temperatures below LED manufacturer's recommended limit to ensure a minimum of 60,000 hours of rated life.

VZ38 50 LED (700mA)

AVERAGE OUTDOOR AMBIENT TEMP	FIXTURE JUNCTION TEMP (Tj)	POTENTIAL LED LIFE EXPECTANCY B10, L70 (hrs)	FIXTURE EFFICACY (lumens / watt)	POTENTIAL LED LIFE EXPECTANCY @ 10 HRS/DAY (yrs)	POTENTIAL LED LIFE EXPECTANCY @ 24 HRS/DAY (yrs)
-30°C / -22°F	22°C	80,000	56	21.9	9.1
-20°C / -4°F	32°C	80,000	55	21.9	9.1
-10°C / 14°F	42°C	80,000	54	21.9	9.1
0°C / 32°F	52°C	78,750	53	21.6	9.0
10°C / 50°F	62°C	78,650	52	21.5	9.0
25°C / 77°F	77°C	77,400	50	21.2	8.8
30°C / 86°F	82°C	76,900	49	21.1	8.8
40°C / 104°F	92°C	75,500	48	20.7	8.6
50°C / 122°F	102°C	73,000	47	20.0	8.3

VZ24 30 LED (700mA)

AVERAGE OUTDOOR AMBIENT TEMP	FIXTURE JUNCTION TEMP (Tj)	POTENTIAL LED LIFE EXPECTANCY B10, L70 (hrs)	FIXTURE EFFICACY (lumens / watt)	POTENTIAL LED LIFE EXPECTANCY @ 10 HRS/DAY (yrs)	POTENTIAL LED LIFE EXPECTANCY @ 24 HRS/DAY (yrs)
-30°C / -22°F	22°C	80,000	59	21.9	9.1
-20°C / -4°F	32°C	80,000	58	21.9	9.1
-10°C / 14°F	42°C	80,000	57	21.9	9.1
0°C / 32°F	52°C	78,750	55	21.6	9.0
10°C / 50°F	62°C	78,650	54	21.5	9.0
25°C / 77°F	77°C	77,400	52	21.2	8.8
30°C / 86°F	82°C	76,900	51	21.1	8.8
40°C / 104°F	92°C	75,500	50	20.7	8.6
50°C / 122°F	102°C	73,000	49	20.0	8.3

Note: Actual LED rated life per the B10,L70 curve is 60,000 hrs. Potential LED life expectency is based on VizorLED's superior thermal management, actual junction temperature (Tj) and projected B10,L70 curves. Projected life in years will be extended even further if used with "DD" or "PX" dimming options.

Type:
Job:

Option details (Factory Installed)

F1 Single Fuse (120/277V)
F2 Double Fuse (208/240V)

Consists of 1 or 2 fuse holders and 1 or 2 KTK/ KLK 30 amp fuses.

CL(XX) Colored Drive Lane Lenses

XX = color of lens:

RD red
BL blue
YL yellow
OR orange
PP purple
PK pink
GR green

Contact factory for additional color options.

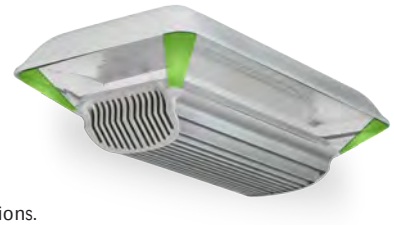

CE Chromed End Caps

Decorative option adds distinctive high-end polish at drive lane view.

DD Dimming Driver (0-10V)

Continuous dimming down to 10% power.

Useful for building management systems to accomplish load shedding during peak energy consumption periods.

PX Proximo™ Occupancy Detector

Contact factory for available % dimming, minimum level 10%.

Accessory details (Shipped Separately)

F1-KIT Single Fuse Kit (120/277V)
F2-Kit Double Fuse Kit (208/240V)

cradle to cradle
reduce renew recycle

C2C Cradle to Cradle Product Recycling Assistance Program

Reduces environmental impact at product end-of-life. The C2C program allows the customer to return the product to Wide-Lite for recycling or disposal within current environmental guidelines.

Notes

Wide-Lite is a Philips group brand

1611 Clovis Barker Road
San Marcos, Texas 78666
PH: 512-392-5821 / FAX: 512-753-1122

Wide-Lite reserves the right to change specifications and dimensions without notice. Lamp and electrical specifications / availability subject to change by manufacturer without notice.

© 2009 Philips Group. All rights reserved.

www.wide-lite.com

CATALOG KEYWORD: ***VZ***
PT#: WLSP0277A0509

ISO 9001 Certified

WIDE-LITE UL REGISTERED FIRM ISO 9001 A5211

LIGHTFAIR INTERNATIONAL The future. Illuminated. 2009

WINNER INNOVATION AWARDS BEST OF CATEGORY 2009
ROADWAY, SPORTS, OUTDOOR ARCHITECTURAL, SITE LIGHTING