Wireless Integrated Photosensor and Motion Sensor

University of California, Santa Barbara

The Problem

The average commercial building in California spends about 35% of its total electrical use on lighting systems. Lighting control systems are broadly acknowledged as offering large, near-term opportunities for energy savings.

Lighting control systems already exist in the market that turn lights off when spaces are unoccupied or when sufficient daylight is available. However, installing currently available lighting control systems involves wiring and can therefore be an expensive proposition in existing buildings.

The Solution

Adura Technologies in partnership with the California Lighting Technology Center (CLTC) developed a wireless integrated photosensor and motion sensor (WIPAM) system that uses wireless communications to circumvent the complicated wiring issue, thus increasing the pool of buildings that could cost effectively benefit from lighting controls.

The Adura LightPoint System™ allows for the installation of controls components in pre-existing light fixtures as well as luminaires involved in new construction. The system is very robust and offers a large amount of programmability. At the core of the system is the light controller. This light controller communicates wirelessly through radio frequency with system components such as occupancy and photosensors—which have wireless capability through the sensor interface—and then, based on given input, modifies the lighting environment to achieve desired light levels in the most energy-efficient manner.

The system is expected to reduce installation and commissioning time by as much as 50% over standard industry practice for competing technologies. An office retrofit project using this kind of technology, for example, could reduce office lighting energy use by as much as 25%.

Features and Benefits

- Reduces installation costs because most system components are wireless
- Intelligent step-dimming is an option; multiple control scenarios are available
- Layer daylighting and occupancy controls to provide greatest energy savings

FIGURE 1: EVERLAST INDUCTION STEP-DIMMING LUMINAIRES WITH WIRELESS INTEGRATED PHOTOSENSOR AND MOTION SENSOR CONTROLS

Lot 18 parking structure, University of California, Santa Barbara

- Can be used with any ballasted or incandescent lighting system

Technology Costs and Incentives

In a recent field study, a lighting system with no controls was compared to a system implementing daylight harvesting, occupancy sensors, and manual dimming. It showed an estimated 20% energy savings for daylight harvesting, 35% for vacancy/occupancy controls, and about 11% for individual dimming.[1] The LightPoint system costs about $140–$180 per fixture, depending on which components are used.

Few incentives currently exist for this technology, so huge potential exists to increase its market penetration. For example, it is estimated that the broad application of daylight harvesting could have an average energy savings of 40%; however, the current implementation has less than 1–2% market penetration rate.[2]

[1] Galasiu, Anca D et al. Energy Saving Lighting Control Systems for Open-Plan Offices: A Field Study. Leukos. Volume 4. July 2007. Pages 7–29.

[2] Lee, E.S. and S.E. Selkowitz. The New York Times Headquarters Daylighting Mockup: Monitored Performance of the Daylighting Control System. 2005. LBNL-56979.

FIGURE 2: PRE-RETROFIT LIGHTING
Parking Lot 18, University of California, Santa Barbara

FIGURE 3: POST-RETROFIT LIGHTING
Parking Lot 18, University of California, Santa Barbara

Demonstration Results

University of California, Santa Barbara

The WIPAM system was demonstrated at the 2009 UC/CSU/CCC Sustainability Conference at the University of California, Santa Barbara, on the second level of Lot 18 parking structure. The structure previously used 150 W (170 W system wattage) high pressure sodium canopy luminaires. All luminaires operated 24 hours a day, 365 days a year (Figure 5).

The goal of this retrofit project was to demonstrate cost-effective perimeter daylighting. Due to existing circuit configurations, a traditional wired photosensor that controls all circuits serving the daylighting zone would extinguish too many interior garage luminaires (Figure 6). This control scenario would potentially create dark interior conditions with light levels below standards.

To avoid costly rewiring, and demonstrate a cost-effective solution that achieved project goals, the demonstration team replaced ten perimeter HPS luminaires with deck-mounted bi-level induction fixtures equipped with Adura wireless daylighting systems. The new fixtures used were 70 W Everlast® induction step-dimming garage luminaires (Figure 7).

The retrofit reduced energy demand by 900 W and produced annual energy savings of 12,790 kWh. This translates to annual energy savings of about $1,600 and a simple payback period of six years.

TABLE 1: BI-LEVEL INDUCTION GARAGE LUMINAIRES WITH WIPAM

Energy rate	0.128 $/kWh
Energy savings from luminaire retrofit	7,884 kWh annually (53%)
Cost savings from luminaire retrofit	$1,009.15 annually
Energy savings from daylighting	1,815 kWh annually (12.2%)
Cost savings from daylighting	$232 annually
Energy savings from occupancy	3,091 kWh annually (21%)
Cost savings from occupancy	$396 annually
Total energy savings	**12,790 kWh (80%)**
Total cost savings	**$1,637**
Project cost	**$9,890**
Payback	**6 years**

FIGURE 4: ADURA LIGHTPOINT SYSTEM BY ADURA TECHNOLOGIES
Wireless Sensor Interface (left), Wireless Gateway (right), and Relay (bottom)

Product Availability

Adura Technologies manufactures the LightPoint System, which will soon include a full line of wireless sensors and wall control interfaces. More information may be found at www.aduratech.com.

Other manufacturers also offer wireless lighting control products, including EnOcean, Lutron, and Watt Stopper/Legrand.

For more information on the Everlast induction step-dimming garage luminaires, visit www.everlastlight.com.

What's next

CLTC continues demonstrations of the WIPAM system as part of the State Partnership in Energy Efficiency Demonstrations (SPEED) Program. A demonstration is in progress in CLTC's facility. Upcoming demonstration projects are slated for Mrak Hall and Bainer Hall on the UC Davis campus. CLTC also will demonstrate the system in office and corridor applications.

Collaborators

The WIPAM demonstration was a collaboration between the California Lighting Technology Center, the Public Interest Energy Research (PIER) Program, Adura Technologies, the University of California, Santa Barbara, and Everlast Lighting.

For More Information

Cori Jackson, Senior Development Engineer
California Lighting Technology Center, UC Davis
cmjackson@ucdavis.edu, www.cltc.ucdavis.edu

- To read more about Wireless Integrated Photosensor and Motion Sensor, visit cltc.ucdavis.edu/content/view/722/383
- More information on demonstrations is available at www.pierpartnershipdemonstrations.com

FIGURE 5: PRE-RETROFIT LIGHTING
Parking Lot 18, University of California, Santa Barbara

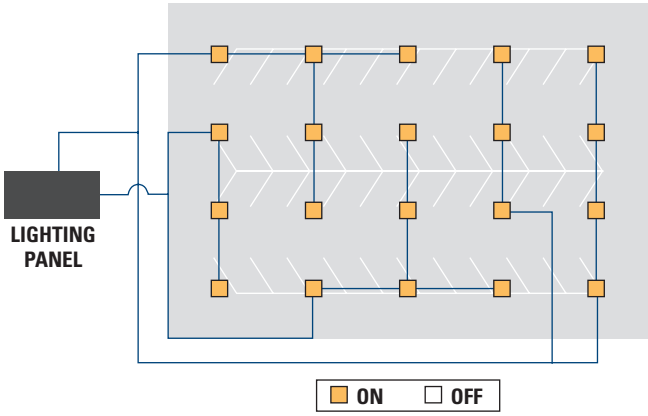

FIGURE 6: TRADITIONAL SOLUTION WITH WIRED SENSOR
Parking Lot 18, University of California, Santa Barbara

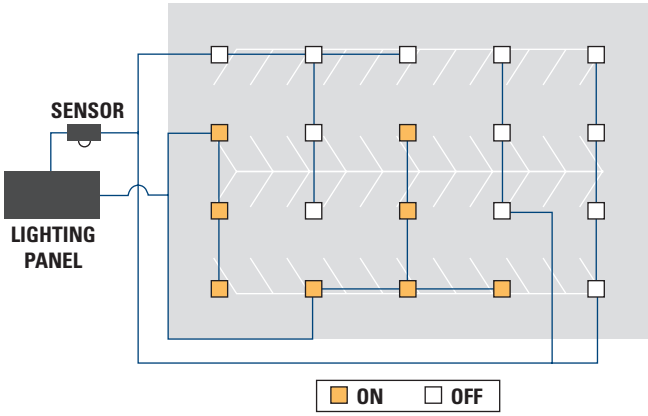

FIGURE 7: POST-RETROFIT LIGHTING USING WIPAM
Parking Lot 18, University of California, Santa Barbara

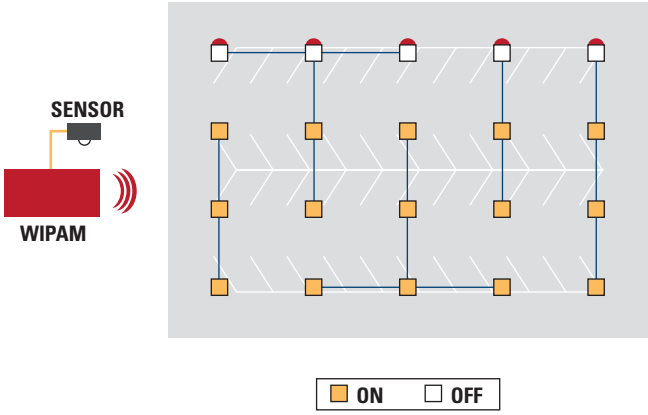

About PIER

This project was conducted by the California Energy Commission's Public Interest Energy Research (PIER) Program. PIER supports public interest energy research and development that helps improve the quality of life in California by bringing environmentally safe, affordable, and reliable energy services and products to the marketplace.

Arnold Schwarzenegger, *Governor*

California Energy Commission

For more information, see www.energy.ca.gov/research

Chair: Karen Douglas *Vice Chair:* James D. Boyd
Commissioners: Jeffrey D. Byron, Anthony Eggert, Robert Weisenmiller