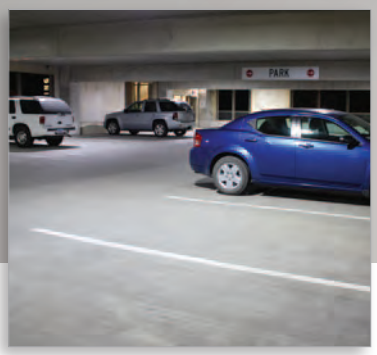

EMCO LIGHTING by Philips Gardco

LED Garage

ELG Generation 2 Luminaires
featuring Dimming and Motion Response Capabilities

PHILIPS

GARDCO

An LED luminaire that satisfies the illumination and durability demands that parking garages require

To the lighting designer and specifier, the parking garage is known to be a complicated and troublesome environment. Initially, one must deal with enclosed spaces with low ceilings, the risk of vandalism, and the presence of exhaust fumes and other air-borne contaminants. Add in the necessity to save energy and reduce maintenance costs in surroundings requiring constant illumination, and you have a major challenge. Fortunately, there is a solution – the Emco LED Garage luminaire (ELG).

LED vs. HID systems

Saving energy has grown to be a major concern to the lighting specifier, making LED lighting systems a popular solution. LED systems use a fraction of the power of traditional metal halide and high pressure sodium systems. When compared with traditional HID sources, additional benefits of LEDs include minimal lumen depreciation, extended life and durability. These combine to reduce overall maintenance costs, saving both time and money.

In many parking garage applications, the 70 Watt ELG can perform nearly as well as a 175 watt metal halide system, while reducing power consumption by an average of 138 watts, or approximately 66%. This can mean energy savings of $121 to $181 per year per luminaire, based on the local electric rate.*

** $121 annual energy savings based on continuous burning at $.10/kwh; $181 savings annual energy savings based on $.15/kwh.*

Minimizing Maintenance and Maximizing Energy Savings

The ELG luminaire is designed to take full advantage of the benefits of LEDs while meeting the unique challenges of parking garage applications.

The heart of the ELG is its high performance optical system, which was designed expressly for parking structures. The system utilizes an integral array of long lasting, energy efficient LEDs oriented to achieve an IES Type V distribution with full cutoff and consistent uniformity of illumination.

The result is uncompromising performance and minimal light trespass, creating a safe environment for vehicles and pedestrians alike. Aided by an integral thermal control system, the LED arrays carry an L_{70} rating of up to 100,000 hours or more, minimizing the hassle and expense of maintenance. Combined with a rugged die cast aluminum housing that will stand up to the harshest conditions, it's clear that the Emco ELG luminaire sets a new standard for visibility, efficiency and durability in the parking garage environment.

Motion Response and Dimming

Greater energy savings are realized by capitalizing on the "instant-on" and dimming ability of LEDs. The ELG offers a Motion Response option that reduces power and light output by 80% when an area is unoccupied for more than five minutes. Additional dimming options can be based on time of day, ambient light, or any other control parameters desired (actual dimming system supplied by others).

Construction as tough as its environment

Thermal Management

Thermal management of high power LEDs is crucial. If the generated heat is not adequately removed, the LEDs will run at higher temperatures, not only lowering their efficiency, but also making them less reliable and shortening their life. The ELG's housing design specifically addresses this issue.

The upper luminaire housing includes lateral airways and integral thermal radiation fins of die cast aluminum, which both permit air flow and dissipate heat. The top of the housing integrates metallic screens that not only allow air to cool the system components, but also prevents the buildup of dust, dirt and contaminants. Internal components are totally enclosed in a rain-tight, dust-tight and corrosion resistant die cast aluminum housing to further ensure a long operating life.

Easy Maintenance

Drivers fail more often than LEDs or other system components. The ELG design permits quick and effortless driver replacement and service. By simply removing four top support screws, the housing opens to reveal the driver compartment, providing convenient access.

Should an LED module fail, the ELG also permits easy replacement of the LED arrays. Just remove the lens support screws, lift off the lens and unplug the LED array module. Reversing this process and connecting a new array into the housing could not be simpler.

The LED arrays and drivers feature a 5 year limited warranty. See the Warranty Information on sitelighting.com for complete details and exclusions.

Simple Installation

Installing the ELG is both efficient and instinctive. The luminaire is supplied with a die formed galvanized steel plate for mounting to a recessed, surface mounted, or rigid pendant hung j-box. An integral hanger tab on the plate provides support for the ELG, suspending the unit during wiring. The luminaire is then securely attached to the j-box assembly with a lift, shift and click motion.

Exceptional performance, outstanding savings

When compared with traditional HID systems, LED systems are capable of using up to 50% less energy. As the chart below illustrates, by adding Motion Response capabilities to the high performance ELG luminaire, you can save as much as 85%, depending upon your usage time at full output.

System	% of Time on Low	Average System Watts	Annual Energy Savings	
			$.10/kwh	$.15/kwh
175MH	0	208	BASE SYSTEM	
ELG Gen 2 - 70W	0	70	$121	$181
ELG Gen 2 - 70W- MR	30%	53	$136	$203
ELG Gen 2 - 70W- MR	40%	48	$141	$211
ELG Gen 2 - 70W- MR	50%	42	$145	$218
ELG Gen 2 - 70W- MR	60%	36	$150	$225
ELG Gen 2 - 70W- MR	70%	31	$155	$233
ELG Gen 2 - 70W- MR	80%	25	$160	$240

ELG Generation 2 - 70W- MR
Watts High = 70
Watts Low = 14
Annual Hours = 8760 continuous burning

Contact your Philips Gardco representative for a personalized savings calculation based on your current rates and expected usage.*

Designed for Easy Retrofit *

The ELG mounting design is notable because it permits a simple retrofit at existing parking garages that utilize the Philips Gardco GP1 luminaire and were installed with the same Quick Mount Plate system. Simply swap out the GP1 for exceptional illumination and maximum energy savings with the ELG luminaire.

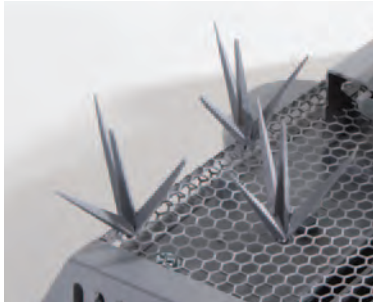

Bird Deterrent and Shroud

Spikes are available to deter birds from roosting or nesting on the luminaire. For pendant-mounted luminaires, a bird shroud is available which works to prevent birds from landing.

Concentrated Downlight

The concentrated downlight optic provides high light levels at garage entrances - important as a transition zone during the daytime - or in areas of the parking garage where mounting heights are higher than normal.

** A significant tax deduction may be available under EPACT 2005 for an energy saving lighting retrofit. Parking garages qualify under this program as interior spaces. Contact your tax advisor for details*

ELG Generation 2 Specifications

GENERAL: Each Emco LED Garage luminaire (ELG) is a ceiling surface or ceiling pendant mounted garage luminaire with integrated lensed LEDs mounted in a fixed array. Internal components are totally enclosed in a rain-tight, dust-tight and corrosion resistant housing. Luminaires are suitable for wet locations.

HOUSING: The ELG housing consists of a rugged die cast aluminum housing body with an integral LED thermal management system.

QUICK MOUNT PLATE AND MOUNTING: A die formed 14 ga. galvanized steel plate is supplied for mounting to a recessed, surface, or rigid pendant hung 4" (10.16 cm) j-box (standard j-box and rigid pendant by others). An integral hanger tab on the plate supports the luminaire during wiring. The mounting design permits simple retrofit at existing parking garages that utilize the Philips Gardco GP1, and were installed with the same Quick Mount Plate System. All pendants, including rigid pendants, and swivel pendants (utilized with the balanced j-box "JB" option) are supplied by others.

OPTICAL SYSTEMS: The Type 5 optic is a single sealed LED lensed array providing an IES Type V distribution. With the Type 5 optic, optional diffused acrylic lenses are available to limit perceived luminaire brightness, while reducing overall luminaire lumen output. Concentrated downlight optic is designed to provide a circular pattern of concentrated light directly below the luminaire, for use at garage entrances or at higher mounting heights as may be required within a parking garage. All LED integrated lens arrays are replaceable.

ELECTRICAL: Luminaires are equipped with an LED driver that accepts 120V through 277V, 50hz to 60hz (UNIV), or a driver that accepts 347V or 480V input. Component-to-component wiring within the luminaire will carry no more than 80% of rated current and is listed by UL for use at 600 VAC at 302°F/150°C or higher. Plug disconnects are listed by UL for use at 600 VAC, 15A or higher.

LED PERFORMANCE:

PREDICTED LUMEN DEPRECIATION DATA*		
Ambient Temperature °C	LED Wattage/ Driver mA	L_{70} Hours**
25 °C	70LA / 390	100,000
	110LA / 600	75,000
40 °C	70LA / 390	65,000
	110LA / 600	50,000

** Predicted performance derived from LED manufacturer's data and engineering design estimates, based on IESNA LM-80 methodology. Actual experience may vary due to field application conditions.*

*** L_{70} is the predicted time when LED performance depreciates to 70% of initial lumen output.*

LED THERMAL MANAGEMENT: The ELG housing design provides integral aluminum thermal radiation fins in the upper housing, combined with lateral air ways, to provide thermal management. Metallic screens are integrated to the top of the housing to prevent the buildup of dust, dirt and contaminants, while permitting required air flow for cooling.

MOTION RESPONSE LUMINAIRES: ELG-MR luminaires include a passive infrared (PIR) motion sensor (WattStopper® FS-305 equipped with an FS-L2W lens) capable of detecting motion within 24 feet of the sensor, 360° around the luminaire, when placed at an 8 foot mounting height. The PIR sensor is mounted as indicated on page 7. When no motion is detected for 5 minutes, the Motion Response system reduces the wattage by 80%, to 20% of the normal constant wattage, reducing the light level accordingly. When motion is detected by the PIR, the luminaire returns to full wattage and full light output.

COVERAGE PATTERN

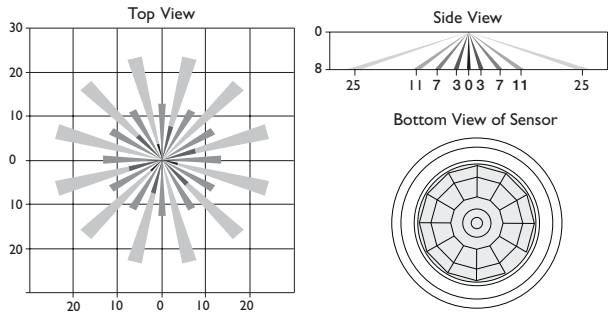

Note: For Motion Response luminaires, L_{70} values are presumed likely to exceed the values shown in the table below left. No specific test data to verify this presumption is yet available.

FINISH: Each luminaire receives a fade and abrasion resistant, electrostatically applied, thermally cured, triglycidal isocyanurate (TGIC) textured polyester powdercoat finish. Standard color is Natural Aluminum Paint.

LABELS: All luminaires bear either UL or CUL (where applicable) Wet Location labels.

WARRANTY: Emco luminaires feature a 1 year limited warranty. Emco LED luminaires with LED arrays feature a 5 year limited warranty covering the LED arrays. LED drivers are covered by a 5 year limited warranty. PIR sensors carry a 5 year limited warranty from the sensor manufacturer. See Warranty Information on sitelighting.com for complete details and exclusions.

	PREFIX	OPTICAL SYSTEM	LED WATTAGE	LED SELECTION	VOLTAGE	FINISH	OPTIONS
Example	ELG	5	110LA	NW	UNIV	NP	F

PREFIX

- **ELG** Standard Luminaire
- **ELG-DIM**[1] w/0-10V Dimming
- **ELG-MR**[2] w/Motion Response

OPTICAL SYSTEM

- **5** IES Type V
- **CD** Concentrated Downlight

LED WATTAGE

- **70LA** *70 watt*[3] *(1) LED integral lens array*
- **110LA** *110 watt*[3] *(1) LED integral lens array*

LED SELECTION

- **CW** *6,500°K, 75 CRI*
- **NW** *4,300°K, 75 CRI*
- **WW** *3,000°K, 75 CRI*

VOLTAGE

- **UNIV** *120V through 277V 50hz or 60hz*
- **347 - 480** *347V or 480V input available in 110LA only*

FINISH

- **NP** Natural Aluminum Paint

OPTIONS

- **F**[4] Fusing
- **DL**[5] Diffusing Integrated Lens
- **PCB**[4] Button Photocontrol
- **BD**[6,8] Bird Deterrent Spike Kit
- **BX**[7,8] Bird Excluding Shroud
- **JB**[9] Balanced j-box with offset knock-out

NOTES:

1. *Luminaire includes 0-10V input wires for dimming control by a dimming system supplied by others. Available in UNIV (120V through 277V) only.*
2. *Luminaire includes a motion sensor which reduces power input and light output by 80% when the area is unoccupied. Refer to specifications on page 6 for more information on the motion sensor provided.*
3. *Nominal wattage shown. Consult submittal data sheet on sitelighting.com for actual input watts.*
4. *120V - 277V only. Specify actual input voltage.*
5. *DL integrated lens replaces Type 5 clear integrated lens. Not available with CD optic.*
6. *Kit consists of 25 injection molded plastic bird deterrent spikes.*
7. *Shroud is for Pendant mount only. 12" (30.48cm) minimum pendant length required. Pendant supplied by others.*
8. *BD and BX options cannot be utilized on the same luminaire. BD and BX options are installed in the field only.*
9. *For non-rigid sway pendant mount. Pendant supplied by others.*

INTEGRATED LENS OPTICAL SYSTEMS

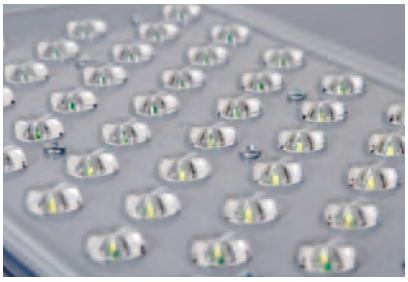

Type 5 Lens

CD Concentrated Downlight Lens

DL Diffusing Lens

DIMENSIONS

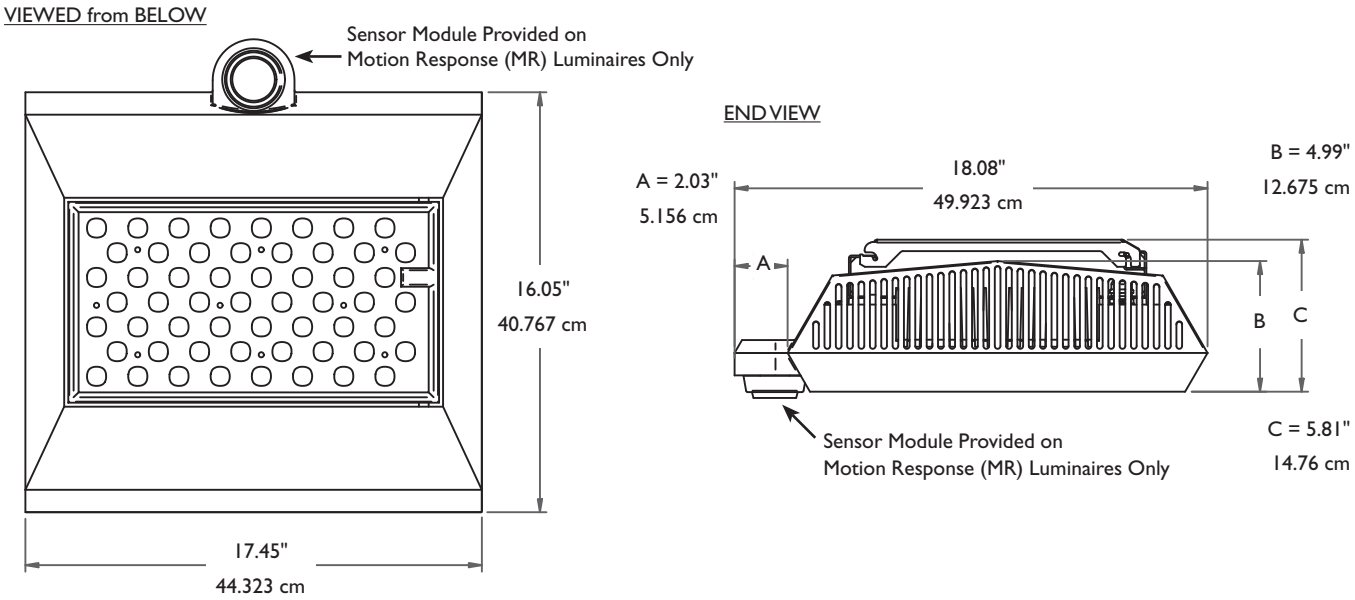

Prior to ordering, consult Submittal Data Sheet on sitelighting.com for the most current information, notes and exclusions.

Philips Gardco reserves the right to change materials or modify the design of its product without notification as part of the company's continuing product improvement program.

1611 Clovis Barker Road
San Marcos, TX 78666
512/753-1000
800/227-0758
Fax: 512/753-7855
sitelighting.com

Philips Gardco Warranty

Emco luminaires feature a 1 year limited warranty. Emco LED luminaires with LED arrays feature a 5 year limited warranty covering the LED arrays. LED drivers are covered by a 5 year limited warranty. PIR sensors carry a 5 year limited warranty from the sensor manufacturer. See Warranty Information on sitelighting.com for complete details and exclusions.

© 2010 Koninklijke Philips Electronics N.V.
All Rights Reserved.

Document order number: E100-001/1210

Job:
Type:
Notes:

ELG

LED Parking Garage Luminaire - Generation 2

Available with Motion Response

Emco ELG parking garage luminaires provide an excellent quality of light in a parking garage application. The high performance integrated lens LED optical systems provide excellent performance, minimizing glare and light trespass. Emco's LED integrated lens LED technology combines with superior thermal control to provide maximized light output and maximum energy savings. The Emco ELG utilizes the identical Quick Mount Plate system that has been proven in years of service with the Gardco GP1 garage luminaire family. Generation 2 luminaires are available with dimming and motion response technologies to further enhance potential energy savings. A concentrated downlight optic is available for use at garage entrances or at higher mounting heights within a parking garage.

PREFIX	OPTICAL SYSTEM	LED WATTAGE	LED SELECTION	VOLTAGE	FINISH	OPTIONS

Enter the order code into the appropriate box above. Note: Gardco reserves the right to refuse a configuration. Not all combinations and configurations are valid. Refer to notes below for exclusions and limitations. For questions or concerns, please consult the factory.

PREFIX

ELG	Emco LED Garage Luminaire Generation 2
ELG-DIM[1]	ELG (Generation 2) with 0-10V Dimming
ELG-MR[2]	ELG (Generation 2) with Motion Response

OPTICAL SYSTEM

5	Type 5 *Utilizing Integrated Lens*
CD	Concentrated Downlight *Utilizing Integrated Concentrated Downlight Lens*

1. Luminaire includes 0-10V input wires for dimming control by a dimming system supplied by others. Availalble in UNIV (120V through 277V) only.
2. Luminaire includes a motion sensor which reduces power input and light output by 80% when the area is unoccupied. See page 3 for more information on the motion sensor provided.

LED WATTAGE with LUMEN DATA

Order Code	Description	LED Current (mA)	LED Selection	Type 5 Optic				CD Optic	
				Standard Optic		With Diffusing Lens (DL)		Concentrated Downlight Lens	
				Watts[3]	Lumens[4]	Watts[3]	Lumens[4]	Watts[3]	Lumens[4]
70LA	70 watt, (1) LED integral lens array.	390	**CW**	69.1	5,781	68.7	4,683	70.9	5,104
			NW	68.7	4,934	68.3	3,862	70.1	4,220
			WW	70.3	4,180	70.2	3,390	72.0	3,671
110LA	110 watt, (1) LED integral lens array.	600	**CW**	110.6	7,878	111.2	6,374	112.1	7.035
			NW	109.5	6,371	109.1	5,155	109.9	5,663
			WW	112.2	5,581	110.9	4,474	112.3	4,903

3. System input wattage may vary based on input voltage, by up to +/- 10% , and based on manufacturer forward voltage, by up to +/- 8%.
4. Lumen values based on photometric tests performed in compliance with IESNA LM-79.

LED SELECTION

CW	*6,000°K , 75CRI*
NW	*4,000°K , 75CRI*
WW	*3,000°K , 75CRI*

VOLTAGE

UNIV	*120V through 277V, 50hz to 60hz input.*
347 - 480	*347V or 480V input Available in110LA only.*

FINISH

NP	Natural Aluminum Paint

OPTIONS

F[5]	Fusing
DL[6]	Diffusing Integrated Lens
PCB[5]	Button Photocontrol
BD[7,9]	Bird Deterrent Spike Kit
BX[8,9]	Bird Excluding Shroud
JB[10]	Balanced J-box with Offset Knock-out

5. 120V - 277V only. Specify actual input voltage.
6. DL integrated lens replaces Type 5 clear integrated lens. Not available with CD optic.
7. Kit of 25 injection molded plastic bird deterrent spikes.
8. Shroud is for Pendant mount only. 12" (30.48cm) minimum pendant length required. Pendant by others.
9. BD and BX options cannot be utilized on the same luminaire. BD and BX options are installed in the field only.
10. For non-rigid sway pendant mount. Pendant by others.

1611 Clovis Barker Road, San Marcos, TX 78666
(800) 227-0758 (512) 753-1000 FAX: (512) 753-7855 sitelighting.com
© 2010 Koninklijke Philips Electronics N.V. All Rights Reserved.
Philips Gardco reserves the right to change materials or modify the design of its product without notification as part of the company's continuing product improvement program.
E200-001/0910

EMCO LIGHTING by Philips Gardco

LED Parking Garage Luminaire - Generation 2

DIMENSIONS

Approximate Luminaire Weight
27 lbs
12.25 kg

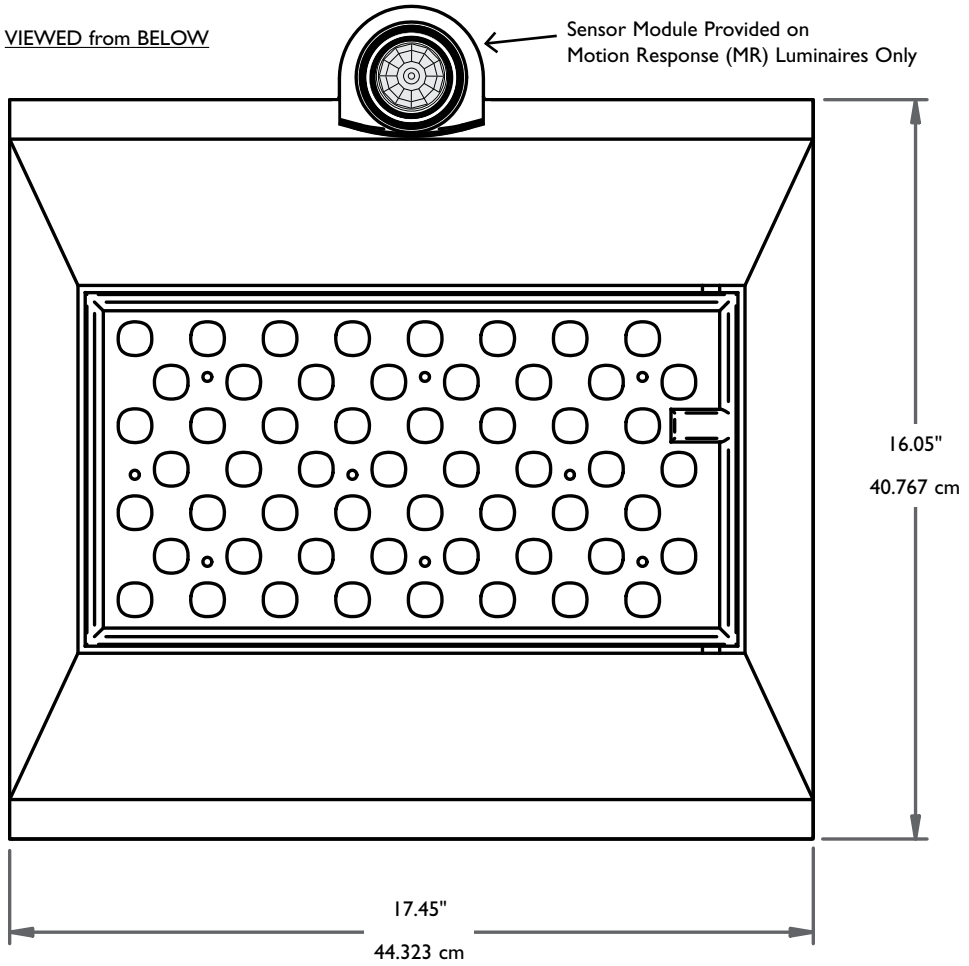

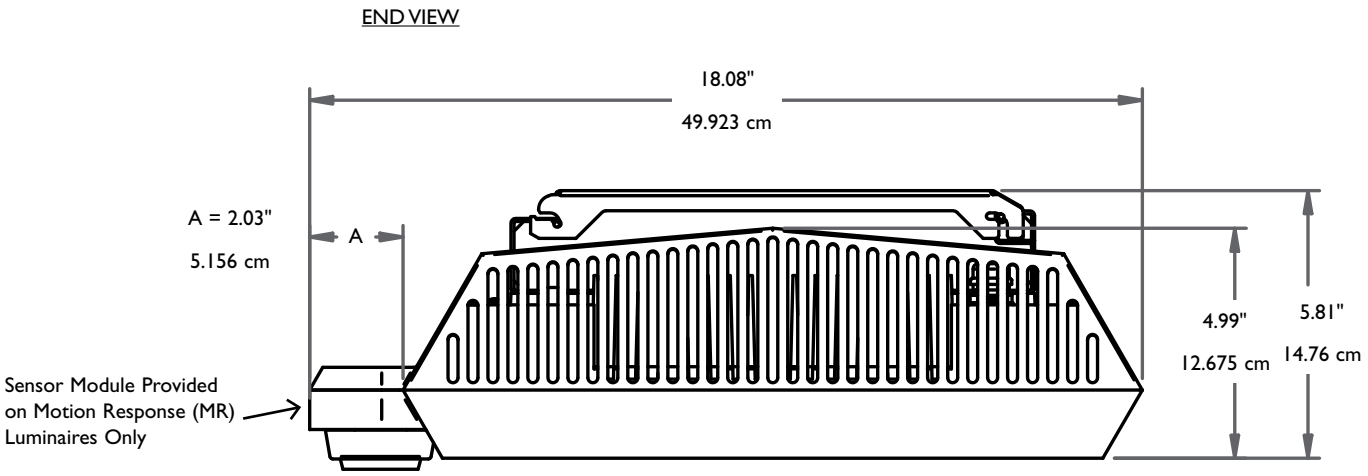

1611 Clovis Barker Road, San Marcos, TX 78666
(800) 227-0758 (512) 753-1000 FAX: (512) 753-7855 sitelighting.com
© 2010 Koninklijke Philips Electronics N.V. All Rights Reserved.
Philips Gardco reserves the right to change materials or modify the design of its product without notification as part of the company's continuing product improvement program.

E200-001/0910

EMCO LIGHTING by Philips Gardco

LED Parking Garage Luminaire - Generation 2

SPECIFICATIONS

GENERAL: Each Emco ELG luminaire is a ceiling surface or ceiling pendant mounted garage or canopy luminaire with integrated lens optics featuring LEDs mounted in a fixed array. Internal components are totally enclosed in a rain-tight, dust-tight and corrosion resistant housing. Luminaires are suitable for wet locations.

HOUSING: The Emco ELG housing consists of a rugged die cast aluminum housing body with an integral LED thermal management system.

IP RATING: The Emco ELG is IP65 rated.

QUICK MOUNT PLATE AND MOUNTING: A die formed 14 ga. galvanized steel plate is supplied for mounting to a recessed, surface, or rigid pendant hung 4" (10.16 cm) j-box (standard j-box and rigid pendant by others). An integral hanger tab on the plate supports the luminaire during wiring. Mounting design permits simple retrofit at existing parking garages that utilize the Gardco GP1, and were installed with the same Quick Mount Plate System. All pendants, including rigid pendants and swivel pendants (utilized with the balanced j-box JB option), are supplied by others.

Caution: Philips Gardco is not responsible for failure of mounting components supplied by others. Proper care should be exercised in mounting component selection to insure adequate luminaire support, given luminaire weight, vibration potential and thermal conditions present in the application. If luminaires are supported solely by screws into a composite j-box, additional support directly to structure is recommended. Failure to properly support the luminaire may cause damage or injury, for which Philips Gardco is not responsible.

OPTICAL SYSTEMS: The Type 5 optic is an integrated lens LED array providing an IES Type V distribution. A Type 5 optic with the optional diffused integrated lens is available to limit perceived luminaire brighness, while reducing overall luminaire lumen output. The concentrated downlight optic provides a circular pattern of concentrated light directly below the luminaire, for use at garage entrances or at higher mounting heights as may be required within a parking garage. All LED integrated lens arrays are replaceable.

LED PERFORMANCE:

PREDICTED LUMEN DEPRECIATION DATA[10]		
Ambient Temperature °C	LED Wattage/ Driver mA	L_{70} Hours[11]
25 °C	70LA / 390	100,000
	110LA / 600	75,000
40 °C	70LA / 390	65,000
	110LA / 600	50,000

10. Predicted performance derived from LED manufacturer's data and engineering design estimates, based on IESNA LM-80 methodology. Actual experience may vary due to field application conditions.

11. L_{70} is the predicted time when LED performance depreciates to 70% of initial lumen output.

Note: For Motion Response luminaires, L_{70} values are presumed likely to exceed the values shown in the table above. No specific test data to verify this presumption is yet available.

ELECTRICAL: Luminaires are equipped with an LED driver system that accepts 120V through 277V, 50hz to 60hz, (UNIV), or a driver that accepts 347V or 480V input. Component-to-component wiring within the luminaire will carry no more than 80% of rated current and is listed by UL for use at 600 VAC at 302°F/150°C or higher. Plug disconnects are listed by UL for use at 600 VAC, 15A or higher.

LED THERMAL MANAGEMENT: The ELG housing design provides aluminum integral thermal radiation fins in the upper housing, combined with lateral air ways, to provide the excellent thermal management so critical to long LED system life. Metallic screens are integrated to the top of the housing to prevent the buildup of dust, dirt and contaminants, while permitting required air flow for cooling.

MOTION RESPONSE LUMINAIRES: ELG-MR luminaires include a passive infrared (PIR) motion sensor (WattStopper® FS-305 equipped with an FS-L2W lens) capable of detecting motion within 24 feet of the sensor, 360° around the luminaire, when placed at an 8 foot mounting height. The PIR sensor is mounted as indicated in drawings on page 2. When no motion is detected for 5 minutes, the Motion Response system reduces the wattage by 80%, to 20% of the normal constant wattage, reducing the light level accordingly. When motion is detected by the PIR, the luminaire returns to full wattage and full light output.

Coverage Pattern

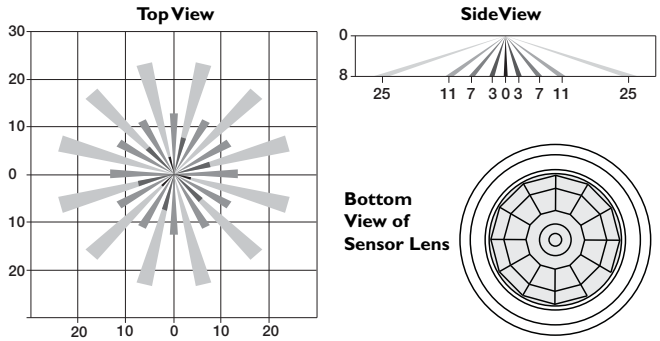

FINISH: Each luminaire receives a fade and abrasion resistant, electrostatically applied, thermally cured, triglycidal isocyanurate (TGIC) textured polyester powdercoat finish. Standard color is Natural Aluminum Paint.

LABELS: All luminaires bear either UL or CUL (where applicable) Wet Location labels.

WARRANTY: Emco luminaires feature a 1 year limited warranty. Emco LED luminaires with LED arrays feature a 5 year limited warranty covering the LED arrays. LED drivers are covered by a 5 year limited warranty. PIR sensors carry a 5 year limited warranty from the sensor manufacturer. See Warranty Information on sitelighting.com for complete details and exclusions.

1611 Clovis Barker Road, San Marcos, TX 78666
(800) 227-0758 (512) 753-1000 FAX: (512) 753-7855 sitelighting.com
© 2010 Koninklijke Philips Electronics N.V. All Rights Reserved.
Philips Gardco reserves the right to change materials or modify the design of its product without notification as part of the company's continuing product improvement program.
E200-001/0910

EMCO LIGHTING by Philips Gardco