LED BOLLARDS

LANDSCAPE & PATHWAY LIGHTING

GARDCO LIGHTING

Gardco Lighting is a Philips group brand

PHILIPS

FORM

The Gardco 830 Series LED Bollard with Demand Response combines refined aesthetics, exceptional light output and maximum energy savings to create the most sophisticated and versatile LED walkway lighting product available today. It begins, of course, with impeccable form – a simple, seamless design that eases into any location, yet retains the rugged strength, all-weather sealing and vandal resistance necessary for the punishing environments where bollards are used. What truly sets the 830 Series apart, however, is its incredible energy-efficient LED Bollard technology exclusively from Gardco. The patent-pending system uses stacked modular louvers to control glare and uniformly distribute LED light in patterns of 180 or 360 degrees. Most impressively, the Demand Response component uses motion-sensing technology to switch between low light and high light modes. This revolutionary feature ensures that low light levels are used when maximum light is unnecessary, resulting in energy savings of up to 90 percent.

CONSTRUCTION

LED Driver for Bi-Level Lighting
The LED driver manages the brightness of the LED lights of the 830 Series, switching between two light levels as needed. On low level – the default used when no motion is present – the bollard power consumption is 8 watts at 120VAC. When triggered by the motion sensor, high level increases to 41 watts at 120V, still well below the wattage of fluorescent and incandescent bulbs.

Concealed Demand Response Motion Sensor
Completely and safely concealed within the bollard head, the 830 Series motion sensor uses microwave technology to detect motion within 20 feet of the bollard, at which time the LED lights switch from low level to high level. Lights return to low level to save considerable energy when high light is no longer needed. The system includes adjustments for duration on high level and motion sensitivity.

Durable, Vandal-Resistant Construction
The 832 and 836 models feature a high-strength galvanized steel tenon that runs the length of the luminaire, providing a solid anchorage, while concealed screws provide the significant vandal resistance required for schools and other settings where bollards are typically used.

Long-Lasting Finish
The finish is a fade- and abrasion-resistant, electrostatically applied, thermally cured textured polyester powdercoat finish. The painted finish is bonded to the exterior surfaces utilizing chromate conversion as a pretreatment. Custom colors may vary in texture, so please consult factory.

Complete Weather Protection
The 830 Series is completely sealed at all points of material transition to exclude the intrusion of rain, insects, dust and contaminants while assuring years of trouble-free service. Truly, this bollard can stand up to the most punishing environments.

Die Cast Head
The die cast aluminum head is available with a domed or beveled top to meet a variety of aesthetic needs and preferences. It secures to the one-piece louver assembly with three (3) concealed tamper-resistant screws.

Long-Lasting LEDs
The LEDs used in the Gardco 830 Series provide a typical lifespan of 50,000 to 60,000 hours, ensuring a long life of trouble-free maintenance. This is far greater than the lifespan of other sources, including fluorescent (typically 10,000 to 30,000) and incandescent (usually 1,000 to 2,000) bulbs.

Stacked Louver LED Technology
The 830 Series features patent-pending stacked modular louvers that can be easily replaced at the end of LED life or as future developments increase the efficiency of the LED source. The louvers contain a ring of ten (10) 1-watt LEDs for 360-degree coverage or ring of five (5) 1-watt LEDs for 180-degree coverage. A louver is shown in detail at right.

Variety of Power Options
The LED power supply in the 830 Series is an efficient rectifier that converts 120-240VAC with an input of 50 to 60 hz to 48VDC. 277V bollards require and include a step-down transformer to provide proper input voltage.

Energy-Efficient LED
Light Emitting Diodes (LED) produce more light per watt than other light sources, resulting in significant energy savings even before the bi-level Demand Response system is taken into account. Additionally, the placement of the LEDs near the edge of the stacked louvers increases luminaire efficiency by up to 100% versus conventional light sources placed behind the louvers. LEDs are available in several colors, and have a typical lifespan of 50,000 to 60,000 hours. One benefit of bi-leveling LEDs is that the longevity increases due to the reduced temperature. Since the LEDs are not driven by high current, the expected life will increase.

Uniform Light Distribution
Modular louvers in the 830 Series conceal glare from the source and spread LEDs for a uniform distribution of light in either a 360- or 180-degree pattern. Light levels can vary based on the quantity of louvers used.

DEMAND RESPONSE

The 830 Series LED Bollard is the most sophisticated and energy-efficient bi-level LED bollard available today, thanks in no small part to its revolutionary Demand Response system. Designed to reduce energy costs and aid in “Green” development, Demand Response allows for different levels of light at different times, ensuring that the system operates at an acceptably low level when maximum light is unnecessary.

After a quick warm-up in high mode, the luminaire switches to low mode, which provides sufficient pathway lighting during the many hours of use – approximately 90 percent of a typical night – when the walkway is unoccupied.

The 830 Series has a concealed motion sensor that detects when a person approaches within 20 feet of the bollard. When this occurs, Demand Response system switches the luminaire to high mode, increasing the light output. The system returns to low mode when the pedestrian leaves the area.

The lighting system can also be configured for 180-degree coverage, ensuring complete backside cutoff. The system includes the ability to make adjustments for the duration of high mode and motion sensitivity.

ENERGY SAVINGS

The 830 Series LED Bollard with Demand Response was conceived, designed and constructed with energy savings in mind. Through the use of highly efficient LED lights as well as the bi-level Demand Response system, the 830 Series provides the required light at all times and significantly reduces the costs of operation.

LED SAVINGS

- The 830 Series uses durable and efficient Light Emitting Diode (LED) technology, which provides many advantages over the light sources typically used in bollards.
- Lower Power Consumption – LEDs use a mere fraction of the electrical power required for other sources, resulting in significant cost savings.
- Improved Light Output – The LEDs in the 830 Series output an impressive 80 lumens per watt, much more than the 15 to 30 lm/w of typical sources.
- Longer Lifespan – Each LED in the 830 Series is rated to last 50,000 to 60,000 hours, multiple times that of other sources.
- Easily Updatable – Because the LEDs on the 830 Series are housed on patent-pending modular louvers, the luminaire can be easily updated to more advanced LED technology as it becomes available via a simple louver replacement.

DEMAND RESPONSE SAVINGS

The Demand Response system allows the 830 Series to operate on two distinct settings based on the specific needs of the environment, resulting in huge energy savings.

- Low Mode – As a default, the system operates in low mode, which consumes only 8 watts of energy.
- High Mode – When pedestrians are present, the Demand Response system initiates the high mode, which consumes 41 watts of energy.

Compared to the most common walkway bollard using a 100-watt metal halide source, the 830 Series produces energy savings of more than 60 percent even when operating in high mode. Yet because typical usage indicates that the 830 Series will operate in low mode for the vast majority of time, the result is energy savings of up to 90 percent or even higher. Truly, the 830 Series LED Bollard with Demand Response is energy-efficient lighting at its best.

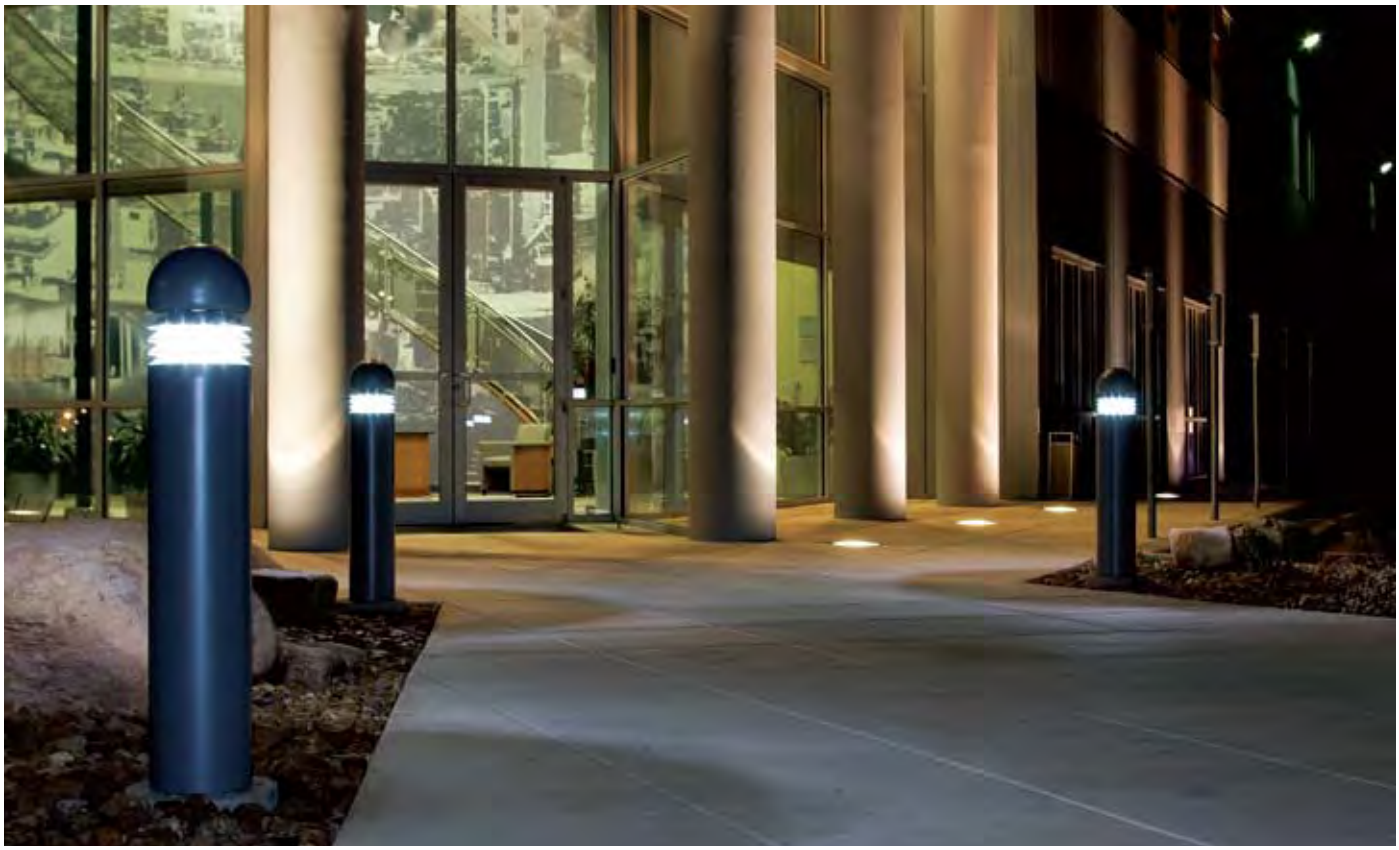

BRM832/BRM836 SCHOOL BOLLARDS

Featuring Demand Response

GENERAL DESCRIPTION: Gardco's BRM832 dome top and BRM836 beveled top louvered LED School Bollards provide uniform illumination and superior spacings. A high-strength galvanized steel tenon throughout the length of the luminaire provides solid vandal resistance. Rugged extruded and cast construction with silicone seals and gasketing assure years of trouble-free service. Gardco's patent-pending stack-louver LED technology and Demand Response provide maximized light output and maximum energy savings.

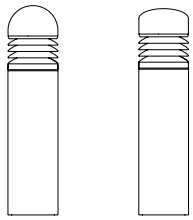

Dome Top Bevel Top

ORDERING

	PREFIX	HEIGHT	LED CONTROL	LED SELECTION	LIGHTED COVERAGE	VOLTAGE	FINISH
Example	BRM832	42	DR	CNW	360	120-240	BRP
	BRM832 **BRM836**	**42"** **36"**	**DR** **CWL**	Neutral White **CNW** **LNW** Cool White **CCW** **LCW** Colors **LA** **LR** **LG** **LB**	**360** **180**	**120-240** *Accepts 120V through 240V, 50hz to 60hz input.* **277** *Requires and includes step-down transformer in Bollard.*	**BRP** **BLP** **WP** **NP** **BGP** **VP** **LGP** **DGP** **LSP** **DSP** **RBP** **OC** **SC**

PREFIX

BRM832 LED Dome Top School Bollard
BRM836 LED Bevel Top School Bollard

LED CONTROL

DR Demand Response
LEDs stay on Low Level (8 watts) when no motion is present. LEDs increase to full light output (41 watts) when motion detected.

CWL Constant Wattage with Full Light Output
LEDs operate at full wattage (41 watts) and light output. No motion sensor included.

LED SELECTION

Neutral White
CNW Cree® Neutral White (3,300°K - 3,700°K, 75 CRI).
LNW LUXEON® Rebel Neutral White (3,650°K - 4300°K, 75 CRI).

Cool White
CCW Cree® Cool White (5,000°K - 10,000°K, 80 CRI).
LCW LUXEON® Rebel Cool White (5,300°K - 6000°K, 70 CRI).

Colors
LA LUXEON® Rebel Amber
LR LUXEON® Rebel Red
LG LUXEON® Rebel Green
LB LUXEON® Rebel Blue

LIGHTED COVERAGE

360 360° Lighted Louvers
180 180° Lighted Louvers
Provide complete backside light cutoff.

FINISH

BRP Bronze Paint
BLP Black Paint
WP White Paint
NP Natural Aluminum Paint
BGP Beige Paint
VP Verde Green Paint
LGP Light Granite Paint
DGP Dark Granite Paint
LSP Light Sandstone Paint
DSP Dark Sandstone Paint
RBP Red Brick Paint
OC Optional Color Paint
Specify RAL designation. Ex. OC-RAL7024
SC Special Color Paint
Specify. Must supply color chip.

A Gardco Green Team product

Prior to ordering, consult Submittal Data Sheet on sitelighting.com for the most current information, notes and exclusions.

Gardco Lighting reserves the right to change materials or modify the design of its product without notification as part of the company's continuing product improvement program.

SPECIFICATIONS

UPPER HOUSING: A die cast aluminum dome top secures to a one-piece diecast zinc louver assembly with three (3) concealed tamper resistant screws.

LOWER HOUSING: .125" (.318cm) wall 6063-T5 extruded aluminum which connects to the top flange of the mounting tenon with four (4) internal hex bolts, inaccessible after installation.

LENS & OPTICAL SYSTEM: Gardco LED Bollards feature the exclusive, patent pending, Gardco stacked louver LED technology, assuring maxmimized light output. Each individual louver is replaceable if needed or desired.

ANCHORAGE: A high strength steel mounting tenon, hot-dip galvanized after fabrication, is secured and double-nut leveled to the concrete footing with (4) 3/8" x 8" x 1 1/2" (.953cm x 20.32cm x 3.81 cm) anchor bolts on a 4 3/4" - 5" (12.07cm - 12.70cm) bolt circle.

ELECTRICAL: The LED power supply is placed within the Bollard shaft and accepts from 120 Volts through 240 Volts, 50hz to 60 hz, input. 277V bollards require and include a step-down transformer to provide proper input voltage to the LED power supply. The LED driver is located in the upper dome. LED power supplies and LED drivers are replaceable. LEDs provided as specified.

Luminaires ordered with Demand Response include a microwave motion sensor. The motion sensor is completely and safely concealed within the LED Bollard head to avoid potential vandalism to the sensor. With Demand Response, LEDs operate on low level (8 watts) when no motion is present. LEDs increase to full light output (41 watts) when motion is detected. Demand Response system includes adjustments for time on high level and motion sensitivity.

Consult supplemental submittal data sheet (available on sitelighting.com) concerning placement of bollards with Demand Response.

FINISH: Each luminaire receives a fade and abrasion resistant, electrostatically applied, thermally cured textured polyester powdercoat finish. The painted finish is bonded to the exterior surfaces utilizing chromate conversion as a pretreatment.

LABELS: All luminaires bear UL or CUL (where applicable) Wet Location labels.

NOTE: Factory supplied template must be used when setting anchor bolts. Gardco Lighting will not honor any claim for incorrect anchorage placement from failure to use factory supplied templates.

DIMENSIONS

Galvanized Steel Mounting System

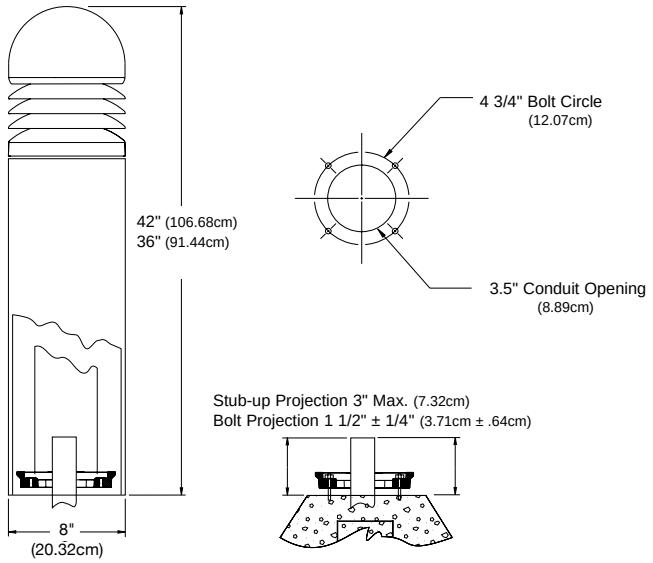

LED Bollard

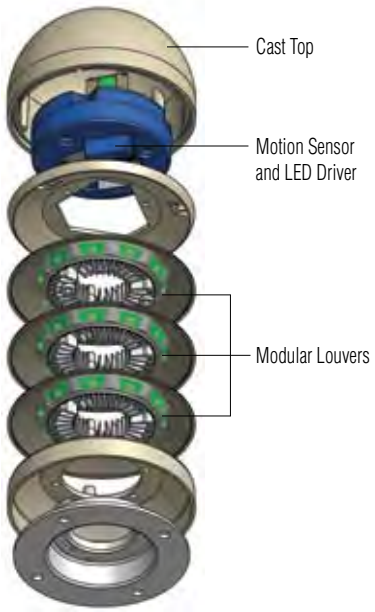

Gardco Lighting reserves the right to change materials or modify the design of its product without notification as part of the company's continuing product improvement program.

BRM830/831/833 DOME TOP LOUVER

BRM834/835/837 BEVEL TOP LOUVER

Featuring Demand Response

GENERAL DESCRIPTION: Gardco's dome top and bevel top LED Louver Bollards provide uniform illumination, superior spacings and solid vandal resistance. Rugged extruded and cast construction with silicone seals and gasketing assure years of trouble free service. The BRM830 and BRM 834 are complete assemblies with an aluminum base. BRM831and BRM835 head only units affix to custom architectural elements. BRM833 and BRM837 luminaires include a concrete base assembly. Gardco's patent-pending stack-louver LED technology and Demand Response provide maximized light output and maximum energy savings.

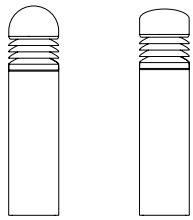

Dome Top Bevel Top

ORDERING

	PREFIX	HEIGHT	LED CONTROL	LED SELECTION	LIGHTED COVERAGE	VOLTAGE	FINISH
Example	BRM830	42	DR	CNW	360	120-240	BRP
	See chart below.	**42"** **36"**	**DR** **CWL**	Neutral White **CNW** **LNW** Cool White **CCW** **LCW** Colors **LA** **LR** **LG** **LB**	**360** **180**	**120-240** *Accepts 120V through 240V, 50hz to 60hz input.* **277** *Requires and includes step-down transformer in Bollard.*	**BRP** **BLP** **WP** **NP** **VP** **LGP** **DGP** **LSP** **DSP** **RBP** **OC** **SC**

PREFIX

DOME TOP	BEVEL TOP		HEIGHT
BRM830	**BRM834**	with Cast Aluminum Base	**42, 36"**
BRM831[1]	**BRM835**[1]	Head Only	**11"**
BRM833	**BRM837**	with Natural Concrete Base	**42"**
BRM833B	**BRM837B**	with Beige Concrete Base	**42"**
BRM833G	**BRM837G**	with Grey Concrete Base	**42"**

1. Not Available in 277V.

LED CONTROL

DR Demand Response
LEDs stay on Low Level (8 watts) when no motion is present. LEDs increase to full light output (41 watts) when motion detected.

CWL Constant Wattage with Full Light Output
LEDs operate at full wattage (41 watts) and light output. No motion sensor included.

LED SELECTION

Neutral White
CNW Cree® Neutral White (3,300°K - 3,700°K, 75 CRI).
LNW LUXEON® Rebel Neutral White (3,650°K - 4300°K, 75 CRI).

Cool White
CCW Cree® Cool White (5,000°K - 10,000°K, 80 CRI).
LCW LUXEON® Rebel Cool White (5,300°K - 6000°K, 70 CRI).

Colors
LA LUXEON® Rebel Amber
LR LUXEON® Rebel Red
LG LUXEON® Rebel Green
LB LUXEON® Rebel Blue

LIGHTED COVERAGE

360 360° Lighted Louvers
180 180° Lighted Louvers
Provide complete backside light cutoff.

FINISH

BRP Bronze Paint
BLP Black Paint
WP White Paint
NP Natural Aluminum Paint
VP Verde Green Paint
LGP Light Granite Paint
DGP Dark Granite Paint
LSP Light Sandstone Paint
DSP Dark Sandstone Paint
RBP Red Brick Paint
OC Optional Color Paint
Specify RAL designation. Ex. OC-RAL7024
SC Special Color Paint
Specify. Must supply color chip.

A Gardco Green Team product

Prior to ordering, consult Submittal Data Sheet on sitelighting.com for the most current information, notes and exclusions.

Gardco Lighting reserves the right to change materials or modify the design of its product without notification as part of the company's continuing product improvement program.

SPECIFICATIONS

UPPER HOUSING: Die cast aluminum dome top secures to one-piece louvered casting with three (3) concealed tamper resistant screws.

LOWER HOUSING:
BRM830 / BRM834: Luminaire features a cylindrical .125 (.318cm) wall 6063-T5 extruded aluminum base housing. Bottom section has a welded-in cast ring for attachment to base assembly with four (4) hex head set screws.

BRM831 / BRM835: Louver head assembly is affixed to ballast mounting bracket which is suitable for insertion into architectural elements (by others).

BRM 833 / BRM837: Luminaire includes a pre-cast concrete base constructed with steel molds and wire reinforcing. Base is acid-etched to provide a smooth textured aggregate finish.

OPTICAL SYSTEMS: Gardco LED Bollards feature the exclusive, patent pending, Gardco stacked louver LED technology, assuring maxmimized light output. Each individual louver is replaceable if needed or desired.

ANCHORAGE:
BRM830 / BRM834: Base assembly consists of a cast aluminum platform and ballast mounting bracket. Assembly is secured and leveled to the mounting foundation with four (4) 3/8" X 8" x 1 1/2" (.953cm x 20.32cm x 3.81cm) anchor bolts on a 4 3/4" (12.07cm) bolt circle. Ballast is prewired with quick electrical disconnects and mounting bracket is secured with two (2) Phillips head screws for ease of installation and servicing.

BRM 831 / BRM835: Mounting plate is cast aluminum with slots to accept anchor bolts (by others) at 90° on a 6 1/4" (15.88cm) diameter bolt circle. A 4 1/2" (11.43cm) diameter opening is required to house ballast assembly.

BRM833 / BRM837: Base assembly consists of four (4) galvanized steel base tabs fastened to pre-cast concrete base. Assembly is secured and leveled to the mounting foundation with four (4) 3/8" X 8" X 1 1/2" (.953cm x 20.32cm x 3.81cm) anchor bolts on a 9 1/2" (24.13cm) bolt circle. Base is designed for 5" (12.7cm) direct burial.

ELECTRICAL: The LED power supply accepts from 120 Volts through 240 Volts, 50hz to 60 hz, input. 277V bollards require and include a stepdown transformer to provide proper input voltage to the LED power supply. The LED driver is located in the upper dome. LED power supplies and LED drivers are replaceable. LEDs provided as specified.

Luminaires ordered with Demand Response include a microwave motion sensor. The motion sensor is completely and safely concealed within the LED Bollard head to avoid potential vandalism to the sensor. With Demand Response, LEDs operate on low level (8 watts) when no motion is present. LEDs increase to full light output (41 watts) when motion is detected. Demand Response system includes adjustments for time on high level and motion sensitivity.

Consult supplemental submittal data sheet (available on sitelighting.com) concerning placement of bollards with Demand Response.

LUMINAIRE FINISH: Each luminaire receives a fade and abrasion resistant, electrostatically applied, thermally cured textured powdercoat finish.

LABELS: All fixtures bear UL or CUL (where applicable) Wet Location labels.

NOTE: Factory supplied template must be used when setting anchor bolts. Gardco Lighting will not honor any claim for incorrect anchorage placement from failure to use factory supplied templates.

DIMENSIONS

BRM830/BRM834

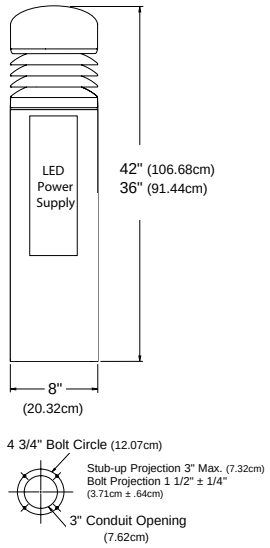

BRM831/BRM835

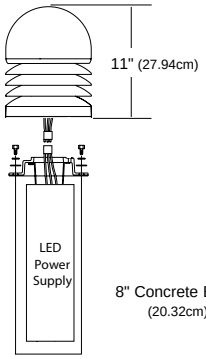

BRM833/BRM837

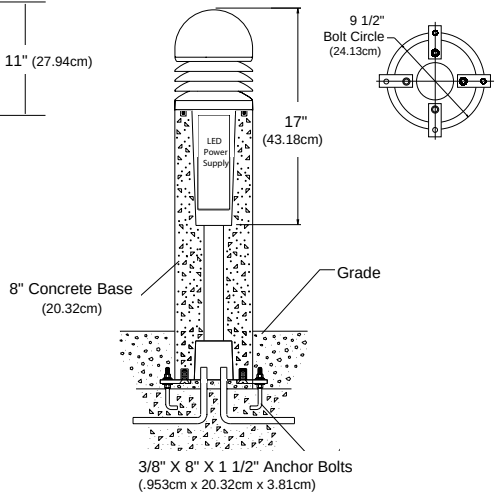

LED Bollard

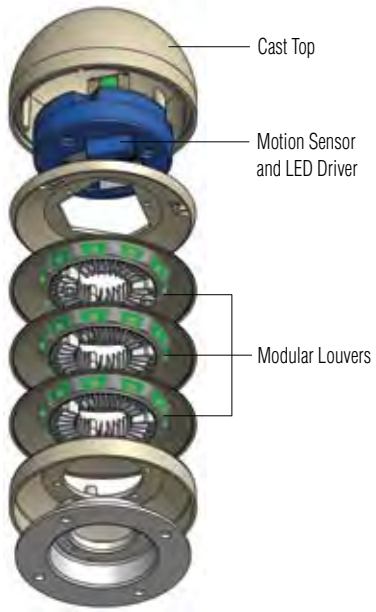

Gardco Lighting reserves the right to change materials or modify the design of its product without notification as part of the company's continuing product improvement program.

Form Ten Round

Gardco Sconce

Floodlight

Step and Aisle Lights

GARDCO
LIGHTING

Gardco Lighting is a Philips group brand

1611 Clovis Barker Road
San Marcos, TX 78666
512/753-1000
800/227-0758
Fax: 512/753-7855
www.sitelighting.com

© 2008 Phillips Group
All Rights Reserved.
International Copyright Secured.

ISO 9001 CERTIFIED

GARDCO UL REGISTERED FIRM ISO 9001 AS211

FSC Mixed Sources

79104-28/0508