INTRODUCING

ARCHWAY™ PASSAGE™

LITHONIA LIGHTING®

ARCHWAY™ PASSAGE™

With a growing trend toward revitalizing urban areas, it is essential that rough-service lighting not only be rugged, but architectural to complement different spaces.

Lithonia Lighting is bridging the gap between our GATEWAY® line of high-end, vandal-resistant products and our traditional utilitarian products to fit this niche. Our new ARCHWAY™ line of rough-service products builds upon our reputation for designing fixtures that are made to last while delivering the performance and appearance architects and specifiers desire.

The first product to be introduced from the ARCHWAY line is the **ARCHWAY PASSAGE** linear fluorescent fixture. This fresh face in rough service lighting is attractive, rugged and smart. With energy-efficiency and sustainablility being major concerns in today's world, the ARCHWAY PASSAGE fixture is ideal. We have packed more options into this fixture than we have in any other parking garage fixture. With improved light output over HID, newer fluorescent technologies such as T5HO, give pedestrians a greater sense of safety and security. The sleek, contemporary design of the ARCHWAY PASSAGE fixture complements many different architectural styles while its ease of installation makes the fixture perfect for both new construction and relight opportunities.

RELIGHTING & REVITALIZING URBAN AREAS

Using ARCHWAY PASSAGE T5, T5HO and T8 fluorescent fixtures for relight opportunities can dramatically revitalize the look of a space. Other benefits include enchanced lighting quality and distribution, as well as reduced energy and maintenance costs. In fact, energy consumption can be reduced by as much as 30-50% leading to a payback of less than two years depending on original lamp source replaced. Ideal spaces for relighting include areas with long burn hours or where the current fixtures use older-style lamps and ballasts. The ARCHWAY PASSAGE fixture offers a bi-level solution for maximizing energy efficiency without sacrificing light quality.

When you combine bi-level switching with options such as photo cells for daylight harvesting and occupancy sensors, it is simply the smart lighting choice for sustainability, energy savings and reducing costs. California Title 24 compliant.

ENERGY EFFICIENT

Energy efficiency is a critical factor in any design. Advancements in lamp and ballast technology combined with superior optics have moved fluorescent lighting to the forefront of many applications, especially parking garages. Fluorescent luminaires offer significant energy savings over one-for-one replacement of metal halide fixtures.

The ARCHWAY PASSAGE fixture is available with fluorescent T5, T5HO and T8 lamps

ENERGY SAVINGS COMPARISON [1, 2, 3]

Fixture	Lamp Type	System Watts (Occupied)	System Watts (Vacant)	Mean Source Lumens	Fixture Efficiency	Mean Delivered Lumens	Luminaire Efficacy Rating (lu/w)	Annual Energy Consumption (kWh)	Annual Energy Cost
VAP 232L WD (ARCHWAY PASSAGE)	32W T8	55	27	6000	76%	4560	82.9	359.16	$43.10
VAP 254L WD (ARCHWAY PASSAGE)	54W T5HO	96	52	9300	75%	6993.6	72.9	648.24	$77.79
T12 Fluorescent	40 T12	88	88	5760	75%	4320	49.1	770.88	$92.51
Metal Halide - Pulse Start	150 MH	180	180	8000	70%	5600	31.1	1576.8	$189.22
Metal Halide - Pulse Start	175 MH	208	208	12800	70%	8960	43.1	1822.08	$218.65
High Pressure Sodium	150 HPS	188	188	15800	70%	11060	58.8	1646.88	$197.63

COST SAVINGS PER FIXTURE WHEN SPECIFYING ARCHWAY PASSAGE (VAP) [1, 2, 3]

Fixture	Hours operated per day	0.06 per kWh			0.08 per kWh			0.12 per kWh		
		T12 (88 input watts)	150 MH (180 input watts)	150 HPS (188 input watts)	T12 (88 input watts)	150 MH (180 input watts)	150 HPS (188 input watts)	T12 (88 input watts)	150 MH (180 input watts)	150 HPS (188 input watts)
VAP 232L WD (55 input watts)	12	$12.29	$36.46	$38.57	$16.38	$48.62	$51.42	$24.57	$72.93	$77.13
	18	$18.43	$54.70	$57.85	$24.57	$72.93	$77.13	$36.86	$109.39	$115.70
	24	$24.57	$72.93	$77.13	$32.76	$97.24	$102.84	$49.14	$145.85	$154.26
VAP 254L WD (96 input watts)	12	$4.20	$28.38	$30.48	$5.61	$37.84	$40.65	$8.41	$56.76	$60.97
	18	$6.31	$42.57	$45.73	$8.41	$56.76	$60.97	$12.61	$85.15	$91.45
	24	$8.41	$56.76	$60.97	$11.21	$75.69	$81.29	$16.82	$113.53	$121.94

ARCHWAY PASSAGE (VAP) SAVINGS VS. INCUMBENT [1, 2, 3]

Fixture	Annual Energy Savings (kWh)		Annual Cost Savings	
	VAP 254L	VAP 232L	VAP 254L	VAP 232L
T12 Fluorescent	122.64	411.7	$14.72	$49.41
Metal Halide - Pulse Start - 150W	928.56	1217.6	$111.43	$146.12
Metal Halide - Pulse Start - 175W	1,051.20	1822.1	$126.14	$218.65
High Pressure Sodium	998.64	1287.7	$119.84	$154.53

Notes:

1. Savings based on operation at 50% occupancy 365 days per year, 24 hours per day at $.12/kWh.
2. Fixture will assist in Title 20 and Title 24 compliance. Energy savings calculations tested and certified by the California Lighting Technology Center (CLTC) and UC Irvine.

Traditionally, parking garages are illuminated 100% of the time but are only occupied 20% of the time. By specifying additional options such as a photo cell or occupancy sensor, you will save energy and extend the life of the fixture.

PHOTO CELL	OCCUPANCY SENSOR
✱ Energy-saving solution for daylight harvesting ✱ Wet location listed ✱ Mounted on end of fixture for optimal performance	 ✱ Cold weather, wet location listed and IP65 rated ✱ Available with 360° lenses for mounting heights up to 8' and 20' ✱ 15-minute time delay after last motion is detected

Don't waste money! Illuminate a space only when necessary.

Save money! By adding control options, lights only come on when a space is occupied.

BETTER ILLUMINATION

The ARCHWAY PASSAGE fixture features precision-formed, high-performance segmented reflectors using premium specular aluminum. Optimized for both 1- and 2-lamp configurations, the reflectors provide better uniformity and improved vertical illumination.

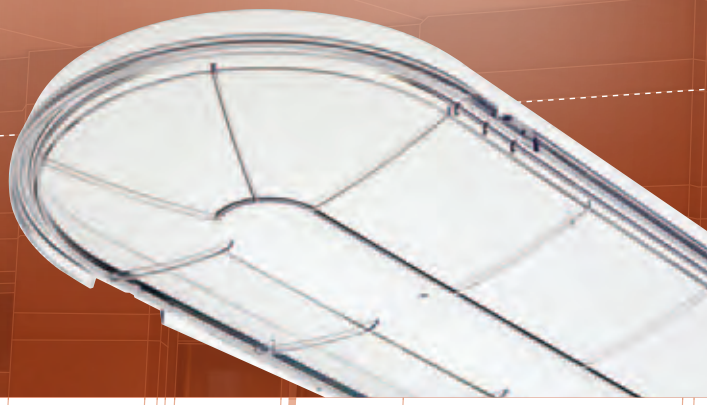

RUGGED CONSTRUCTION

The injection-molded, vandal-resistant housing of the ARCHWAY PASSAGE fixture is UV-stabilized frosted polycarbonate with a continuous poured-in-place, closed-cell gasket. Similarly, the injection-molded lens is UV-stabilized and impact-resistant. The lens, featuring a decorative rib detail, and the tamper-resistant latches are made of a clear, transparent polycarbonate material.

The channel and channel cover are constructed from 20-gauge steel. The fixture design allows for 10 -12% uplight to minimize the “cavern effect” while featuring tool-less ballast and wiring access for ease of maintenance.

Lithonia Lighting offers the following warranty for rough-service fixtures:

Rough-service products by Lithonia Lighting are engineered to withstand extreme physical assault. When properly installed per instructions for maximum vandal resistance, any rough-service lighting fixture utilizing a polycarbonate lens and/or polycarbonate housing enclosure that is rendered inoperable as a result of physical abuse, will be repaired or replaced without charge for the life of the product.

EASY INSTALLATION

The ARCHWAY PASSAGE fixture was designed with the contractor in mind. With its multiple mounting options, this fixture provides easy installation in both relight and new construction applications. Whether the application requires mounting to an existing junction box, to the surface, or by chain or conduit, we have a solution for you.

Captive-latch design and smooth exterior allow for easy access and maintenance.

QUICK MOUNT

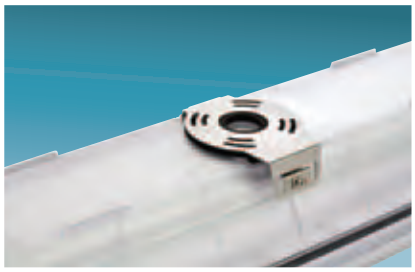

JUNCTION BOX

CONDUIT ENTRY

CHAIN MOUNT

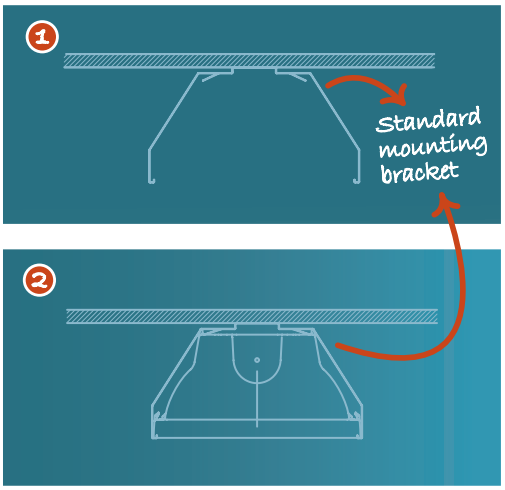

SURFACE MOUNT

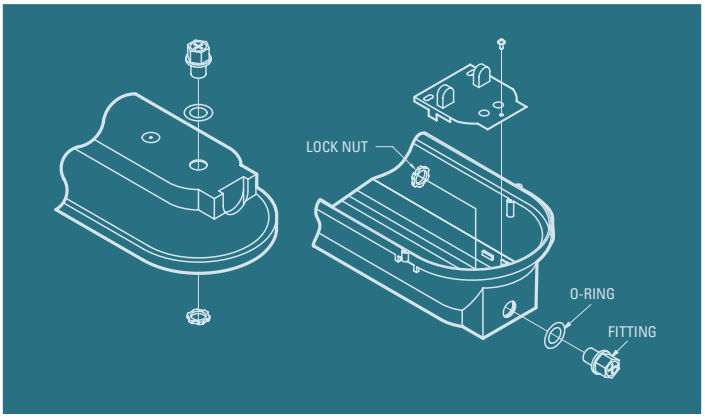

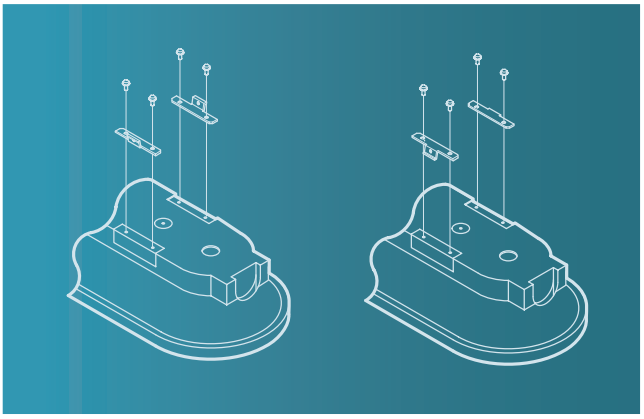

SAFETY & SECURITY

When safety and security are a concern such as in parking garages and stairwells, the ARCHWAY PASSAGE fixture is the smart choice. Its fluorescent lamps offer improved light quality over HID lamps while its polycarbonate housing provides uplight for increased light levels. Better illumination not only gives pedestrians more visibility and a greater sense of security, but also improves the effectiveness of security cameras installed in the space.

GLARE CONTROL

With its light control options, the ARCHWAY PASSAGE (VAP) fixture delivers highly customizable light output while reducing glare.

Prismatic light control film

Striped light control film

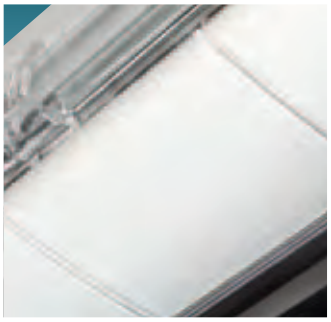

Opaque light control film

Houseside shield eliminates light trespass

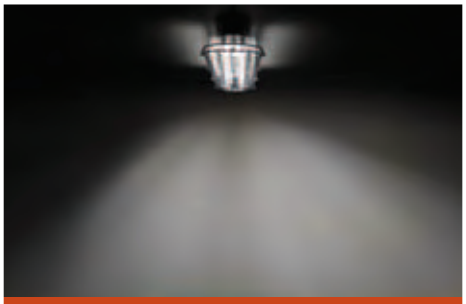

VAP with houseside shield option

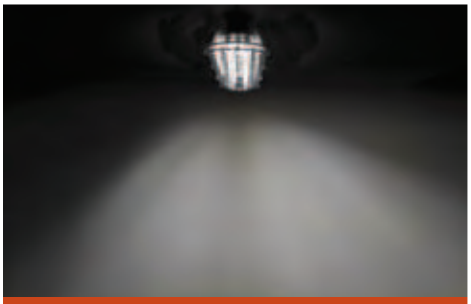

VAP with uplight shield option

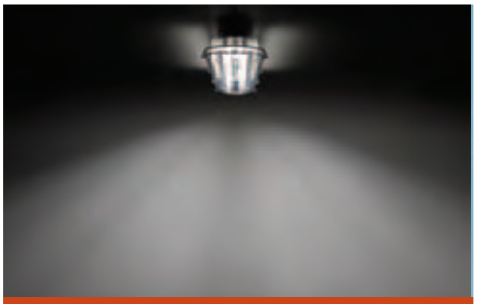

VAP without houseside shield or uplight sheild options

TYPICAL ILLUMINATION

The ARCHWAY PASSAGE fixture provides better uniformity and vertical illumination making it the obvious choice in parking garage luminaires.

DOUBLE-ROW SYSTEM LAYOUT
LIGHT LOSS FACTOR = 0.81 & BALLAST FACTOR = 0.87

Fixture	Bay Width	Mounting Height	Spacing	Length	A	B	C	D	E	F	Avg. FC	Avg. / Min.	Max. / Min.
VAP 232L	55'	8'	20'	22'	12.6	4.4	4.2	5.7	2.8	4.4	5.7	2.0	4.5
	55′	8'	30'	22'	12.1	2.5	2.4	5.0	1.6	4.0	4.6	2.9	7.6
	55′	9'	20'	22'	10.4	4.7	4.7	6.2	3.1	4.5	5.6	1.8	3.4
	55′	9'	30'	22'	9.9	2.7	2.8	5.4	1.8	4.0	4.4	2.5	5.5
	60'	8'	20'	24'	12.7	4.2	3.6	4.6	1.6	1.9	4.8	3.0	7.9
	60′	8'	30'	24'	12.2	2.3	2.1	3.9	0.9	1.6	3.8	4.3	13.6
	60′	9'	20'	24'	12.6	4.2	3.6	4.6	1.6	1.9	4.8	3.0	7.9
	60′	9'	30'	24'	9.9	2.5	2.5	4.4	1.1	1.8	3.7	3.4	9.0
VAP 254L	55'	8'	20'	22'	20.3	6.8	6.1	8.4	4.2	6.7	8.8	2.1	4.8
	55′	8'	30'	22'	19.6	3.8	3.6	7.4	2.4	6.1	7.2	3.0	8.2
	55′	9'	20'	22'	16.8	7.2	7.1	9.4	4.6	6.7	8.6	1.9	3.7
	55′	9'	30'	22'	16.0	4.4	4.4	8.2	2.7	6.0	7.0	2.6	5.9
	60'	8'	20'	24'	20.8	6.6	5.2	6.5	2.2	2.6	7.3	3.3	9.5
	60′	8'	30'	24'	20.0	3.6	3.0	5.6	1.3	2.2	6.0	4.6	15.4
	60′	9'	20'	24'	17.7	6.9	6.0	7.5	2.6	3.0	7.3	2.8	6.8
	60′	9'	30'	24'	16.2	3.9	3.6	6.6	1.6	2.6	5.8	3.6	10.1

DOUBLE-ROW SYSTEM

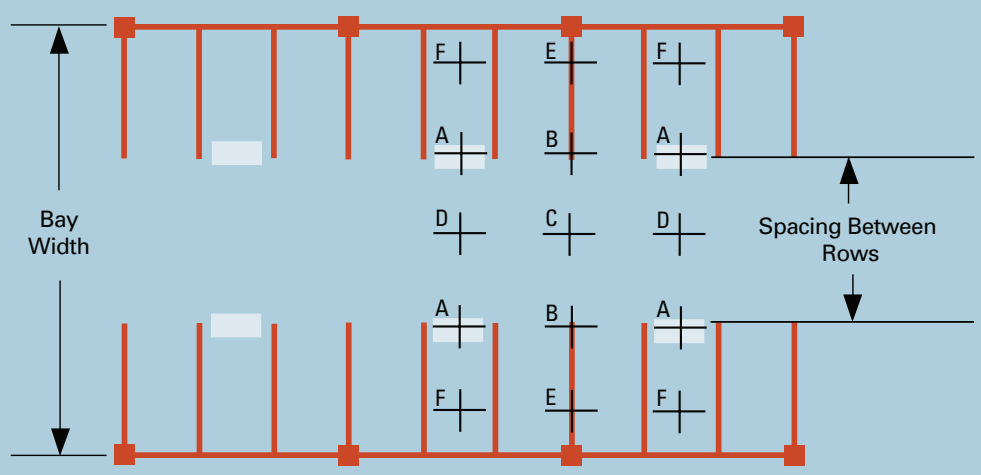

A typical parking garage layout consists of a double-row system.

VARIOUS APPLICATIONS

The ARCHWAY PASSAGE fixture is UL Listed for wet location and IP65 rated for use in indoor and covered-ceiling outdoor applications. It's versatility, sleek design and wide list of options make it the perfect solution in multiple applications.

Ideal in applications such as:

- Retail Mall
- Tunnel
- Garden Center
- Industrial Facility
- Parking Garage
- Stairwell

Locker Room

Correctional Facility

Commercial Kitchen

Hospital Entrance

ARCHWAY™ PASSAGE™

LITHONIA LIGHTING®

ORDERING INFORMATION

For shortest lead times, configure products using **bolded options.**

Example: VAP 254L

Series	Lamp type[1]			Shielding	Distribution	Voltage	Ballast configuration
VAP	T5HO lamps **154L** 1 lamp, 54W **254L** 2 lamps, 54W	T5 lamps 128T5L 1 lamp, 28W 228T5L 2 lamps, 28W	T8 lamps **132L** 1 lamp, 32W **232L** 2 lamps, 32W	**(blank)** Clear polycarbonate	White ballast cover **(blank)** General distribution Specular reflector **WD** Wide distribution	**(blank)** MVOLT; 120V-277V HVOLT 347V-480V[2]	**(blank)** One ballast 2/1 Two 1-lamp ballasts[3]

Ballast		Lamps installed[7]		Options[8]			
T5/T5HO		**(blank)**	85 CRI, 841	GLR	Internal fast-blow fusing	JSB	Junction box snap bracket [13]
(blank)	1.0 BF, PRS	LP830	85 CRI, 830	EL14DW	Emergency lighting (1400 lumens)[9]	CX	6′ white cord, 18/3, no plug
GEB80S	.80 BF, step dimming (100%-50%)[3, 4]	LP835	85 CRI, 835	MSI__	Wet location motion sensor bracket[9, 10, 11]	CS88	6′ Brad Harrison 16/3 cord and plug set
GEB90S	.90 BF, PRS, stepdimming[5]	LP850	85 CRI, 850	PE	Photoelectric cell (button type)[9, 12]	CS88L12	12′ Brad Harrison 16/3 cord and plug set
T8				RIF1	Radio interference filter, one per fixture	HS	Houseside shield
(blank)	1.18 BF, IS			B50CW	Cold weather battery pack[6, 9]	UPS	Uplight shield
GEB10IS	.88 BF, IS			WLF	Wet location fitting (two outboard, top)	LCF1	Prismatic light control film[13]
GEB10ISL	.76 BF, IS			WLFEND	Wet location fitting (one end)	LCF2	Opaque light control film[13]
GEB10PS	1.00 BF, PS			WLFEND2	Wet location fittings (both ends)	LCF3	Striped light control film[13]
BSNP	.87 BF, PS step dimming[3, 6]			WLFIN	Wet location fitting (two inboard, top)	STSL	Stainless steel latches
				HC36	Wire hook and 36″ chain set (two per package)[13, 14, 15]	NOM	NOM Certified
				QMB	Quick-mount ceiling bracket [13]		
				CMB	Chain-mount bracket [13]		

ACCESSORIES

Order as separate catalog number.

VAPSMB	Surface spring-mount bracket
VAPQMB	Quick-mount ceiling bracket
VAPCMB	Chain-mount bracket
VAPJSB	Junction box snap bracket

All dimensions are shown in inches (centimeters) unless otherwise noted.

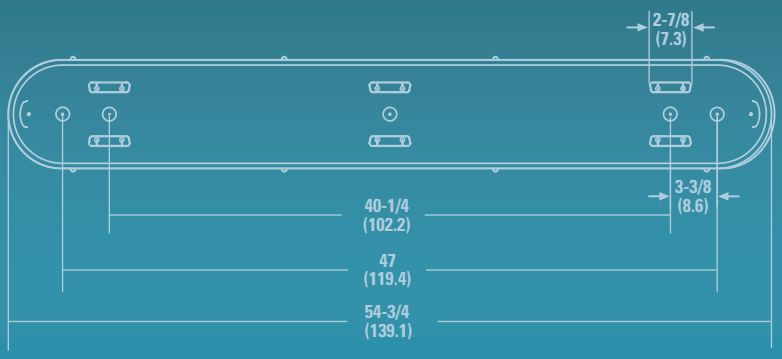

Notes

1 To order fixtures WITHOUT lamps, remove the "L" from the description (example: VAP 132).
2 Not available with 28T5 or 1-lamp 32T8.
3 Available with 2-lamp unit only.
4 Available with 54T5HO only.
5 Available with 28T5 only.
6 Available with 32T8 only.
7 Alternate lamp color need only be specified if pre-installed lamps are provided.
8 For additional options, consult factory.
9 Must specify voltage.
10 GEB10PS recommended.
11 For mounting up to 8′, specifiy MSI8; for mounting up to 20′, specify MSI20.
12 Not available with 480V.
13 Accessories may be ordered as separate catalog numbers.
14 For stainless steel, specify STS (example: HC36 STS)
15 Requires chain mount bracket (CMB option).

LITHONIA LIGHTING®
An Acuity Brands Company

SPECIAL APPLICATIOINS | One Lithonia Way | Conyers, GA 30012 | Phone: 800.315.4963 | www.lithonia.com/passage
©2010 Acuity Brands Lighting, Inc. All rights reserved. 08/10 IR7269 Form No. 160.004