EVERLAST® INDUCTION LIGHTING

Manufactured in Jackson, Michigan U.S.A.

888-383-7578
www.everlastlight.com

EverLast® Smart Light Series
Patent Pending Induction Shoe Box Fixture

EverLast® Smart Light Fixtures incorporate step-dimming and on/off sensor controls for increased pedestrian safety and unmatched energy savings.

- **Lamp Rating:** 100,000 Hours for enhanced safety and maintenance
- **Lumen Maintenance:** 70% over 100,000 Hours
- **Step-dimming** ballast option dims to 50% power for increased energy savings.
- **Energy Savings:** 50% - 70% over HPS and HID
- **IP Rating:** IP65
- **Light Output:** 5000K, 82-85 CRI
- **Voltage:** 120-277 Standard, 347 and 480 volt available
- **Applications:** Parking lots, athletic courts and off road areas
- **Warranty:** 10 year warranty (see terms and conditions)

Taking Orders Now!

Lamp Specifications

Wattage	Lumens	CRI	CCT (KELVIN)	Rated Life
ESBUS-EC-70W	5,900	82-85	5000	100,000 hours
ESBUS-EC-100W	8,400	82-85	5000	100,000 hours

Ballast Specifications

System-Wattage	Input Voltage	Input Current	Input Freq.	Power Factor	Ambient Temp	THD
75W	120-277V	0.63-0.29A	50/60Hz	>0.95	-40 to 130 F°	<10%
105W	120-277V	0.93-0.42A	50/60Hz	>0.95	-40 to 130 F°	<10%

EverLast® Smart Light Series Physical Specifications

- Specular reflector optimized for induction lamp geometry
- Integrated heat sink system for extended life
- Acrylic lens with Type IV prescription
- Heavy duty aluminum/hybrid interior design with increased durability for harsh environments.
- Lamps- 5000K, 85CRI scotopically enhanced white light source for improved vision and color recognition.
- Ballast option dims to 50% power on vacancy with automatic on to high level upon occupancy, for significant savings and enhanced security

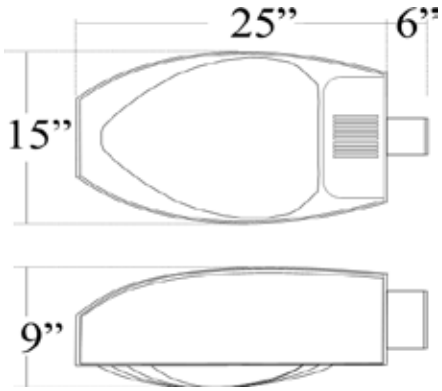

Legal Notice: Full Spectrum Solutions owns proprietary rights in the EverLast® Smart Light Series of fixtures in the form of pending patent applications in the US and PCT applications for International protection. One or more features of this system may be protected by one or more patent applications. Patent questions can be addressed in writing to the Law offices of: Lowe, Hauptman, Ham & Berner, LLP located at Suite 300, 1700 Diagonal Road, Alexandria, Virginia 22314 -- Patent Attorneys.

EverLast® Lighting A Product of Full Spectrum Solutions, Inc. 2009, All Rights Reserved
888-383-7578 www.everlastlight.com
712 E. South Street Jackson Michigan, 49203 U.S.A.

EverLast® Smart Light Series
Patent Pending Induction Shoe Box Fixture

EverLast® Smart Light Fixtures incorporate step-dimming and on/off sensor controls for increased pedestrian safety and unmatched energy savings.

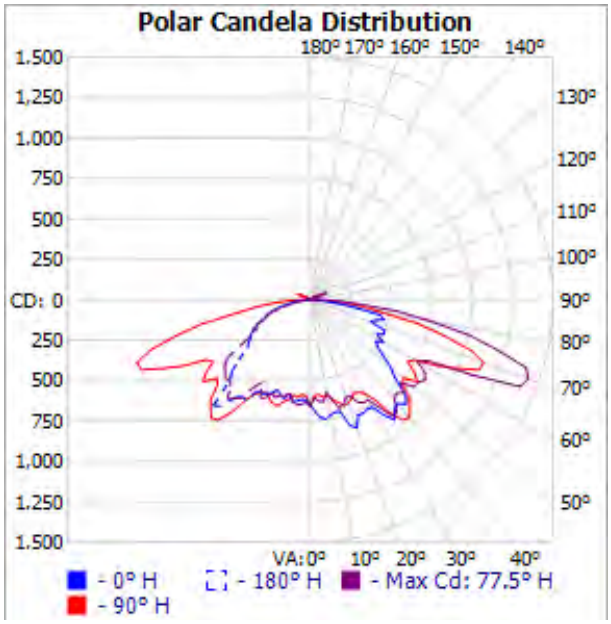

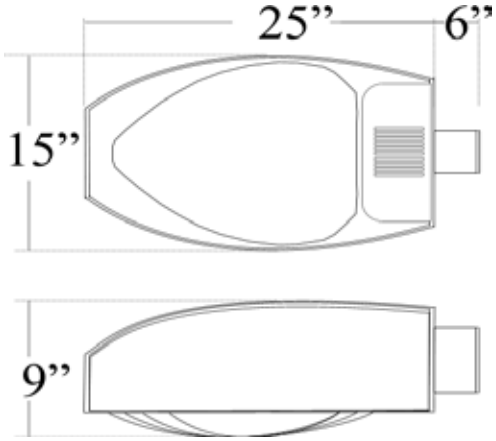

IES Recommended Spacing

20ft. Mount Height

70w	90ft.	4:1 Maximum Uniformity Ratio
100w	100ft.	5:1 Maximum Uniformity Ratio

Legal Notice: Full Spectrum Solutions owns proprietary rights in the EverLast® Smart Light Series of fixtures in the form of pending patent applications in the US and PCT applications for International protection. One or more features of this system may be protected by one or more patent applications. Patent questions can be addressed in writing to the Law offices of: Lowe, Hauptman, Ham & Berner, LLP located at Suite 300, 1700 Diagonal Road, Alexandria, Virginia 22314 -- Patent Attorneys.

EverLast® Lighting A Product of Full Spectrum Solutions, Inc. 2009, All Rights Reserved
888-383-7578 www.everlastlight.com
712 E. South Street Jackson Michigan, 49203 U.S.A.