Wide-Lite
1611 clovis r. barker road ■ san marcos, tx ■ 78666 ■ ph: 512.392.5821 ■ fax: 512.753.1122

HIBRED™

HID ▪ LED SITE-LIGHTING

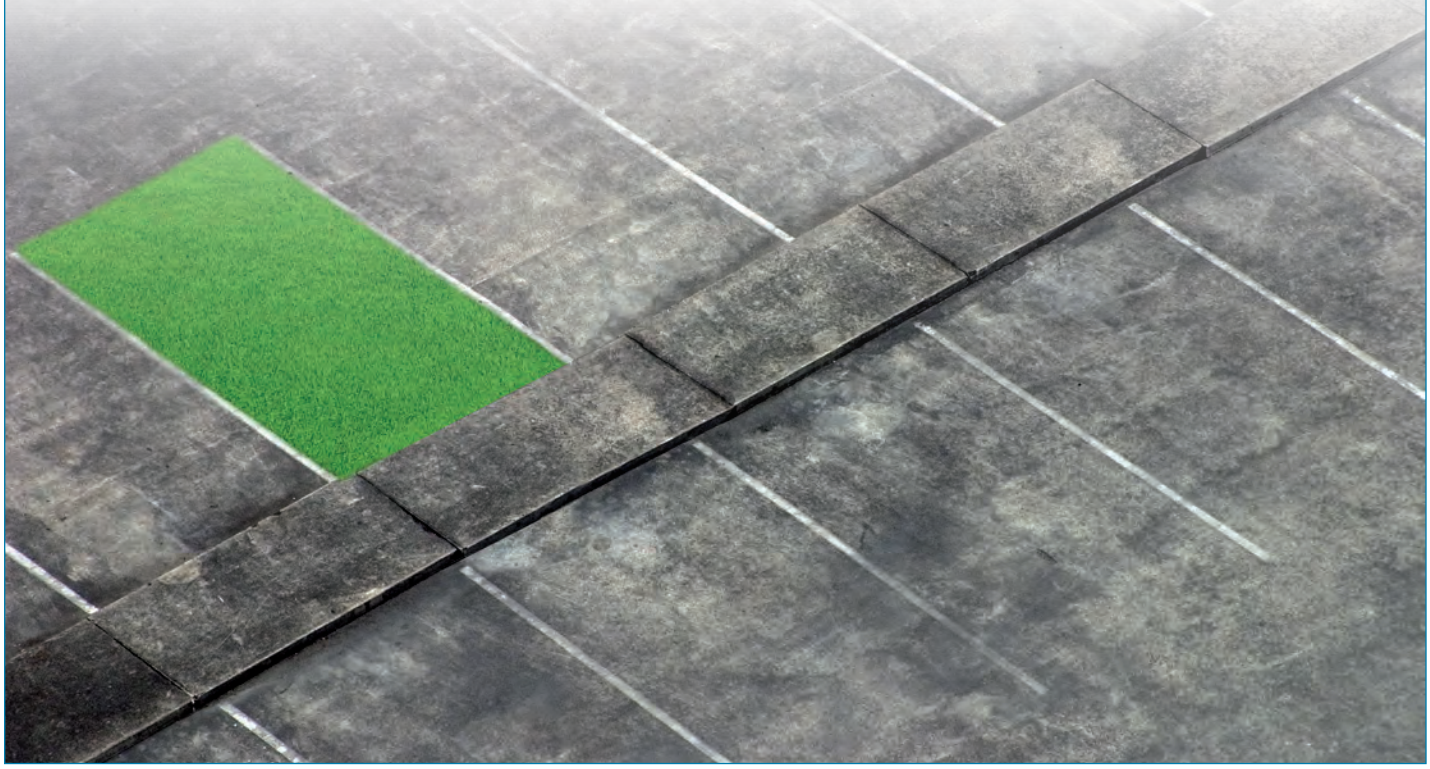

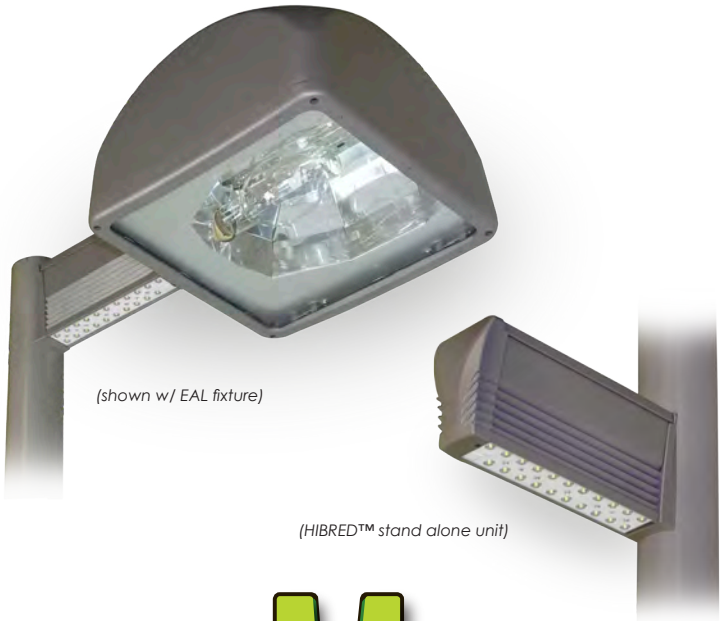

FEATURES & BENEFITS

- Industry's first system to combine traditional HID sources with current LED technology.
  - The site fixture provides primary illumination during peak hours with today's traditional HID sources.
  - The arm mount integrates an LED array which switches on during off-peak hours (stand alone unit also available).
- No compromise in meeting IES criteria during peak hours with the HID fixture.
  - Continue to provide a cost effective 400W HID solution that cannot be matched with LEDs alone.
  - Continue to maximize pole spacings to minimize fixture counts and expensive installation costs.
- Be able to provide a cost effective 'Green Friendly' LED site-lighting solution.
  - The LED array provides an extremely uniform low-level of illumination during curfew hours.
  - LED array consumes 27 total watts of power compared to 462 watts for a 400W PSMH (95% savings).
  - Reduced lighting levels equate to a significant reduction in light pollution (Dark-Sky friendly).
- Provides a rated life of 60,000 hours, while also extending the life of the HID source.
  - Since the primary HID lamp is not operating during off-peak hours, lamp life can more than double.
  - Potentially doubling the time between required lamp maintenance, cutting maintenance costs in half.
- Cradle to Cradle (C2C) product recycling assistance program available.

HIBRED™
ORDER FORM

WideLite®

DIMENSIONS

HIB-21-EAL19-3L0
w/ EAL19 fixture

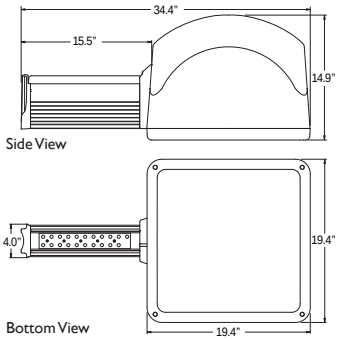

HIB-21-AL3-3L0
w/ AL3 fixture

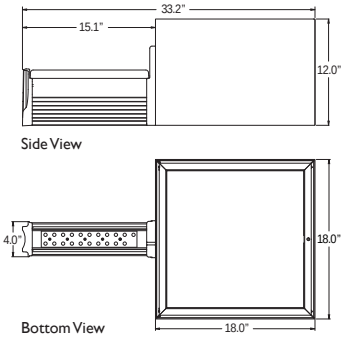

HIB-21-AL3R-3L0
w/ AL3R fixture

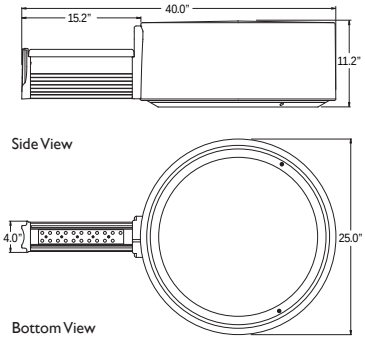

HIB-21-STND-3L0
Stand alone unit

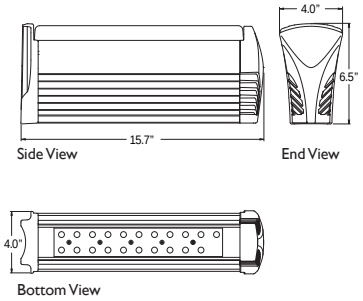

TECHNICAL DATA
(Rated Life 60,000 hrs, 1267 lumens @ 25° C, 27 total system watts, 47 lms/w. See LED COLOR for available CCTs. *Contact factory for additional CCTs*)

Average Size Parking Lot Analysis (minimum 25 fixtures)

	HIB-21-AL3-3L0 @ 18' M.H.	AL3P-150-3F/5F	*HIB-21-AL3-3L0 @ 25' M.H.	AL3P-400-3F/5F
Average FC Level	0.35 FC	2.0 FC	0.23FC	4.0 FC
Maximum FC	0.66 FC	4.0 FC	0.44 FC	7.5 FC
Minimum FC	0.11 FC	0.5 FC	0.07 FC	0.8 FC
Max/Min Uniformity	6:1	8:1	6:1	9:1

HIBRED™
LED Off Peak Hours

EAL (shown)
HID Peak Hours

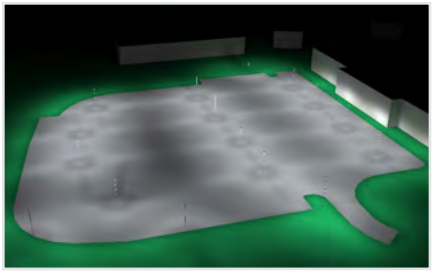

*HIBRED Layout 25' mounting height, 26 fixture total

ORDERING INFORMATION

SERIES	# of LEDs	LED COLOR	FIXTURE	DISTRIBUTION	VOLTAGE	MOUNTING	OPTIONS	FINISH	ACCESSORIES
HIB	21								
		NW CW	EAL19 AL3 AL3R STND	3L0 3L90 3L270 5L	120 208 240 277	SS (standard) SPTA-(XXX)-HIB RPTA-(XXX)-HIB	RETRO	TBK TDB TSA TWHT TGN TGR RAL(*)	HSS C2C

SERIES # of LEDs LED COLOR FIXTURE DISTRIBUTION VOLTAGE MOUNTING

- ☑ **HIB**
- ☑ **21**
- ☐ **NW** Neutral White (4250K +/- 250K)
- ☐ **CW** Cool White (5500K +/- 250K)
- ☐ **EAL19**
- ☐ **AL3**
- ☐ **AL3R**
- ☐ **STND** Stand alone unit
- ☐ **3L0** Type III @ 0°
- ☐ **3L90** Type III @ 90°
- ☐ **3L270** Type III @ 270°
- ☐ **5L** Type V

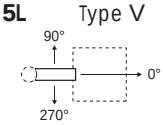

- ☐ **120**
- ☐ **208**
- ☐ **240**
- ☐ **277**
- ☐ **SS** Surface Arm Mount (standard)
  (mounts to 4-5" RD pole, includes 3-4" RD and SQ adaptors)
- ☐ **SPTA-(XXX)-HIB** Square Pole Tenon Adapter
  Specify mounting configuration: ***190*** *= 1 @ 90°;* ***290*** *= 2 @ 90°;* ***390*** *= 3 @ 90°;* ***490*** *= 4 @ 90°;* ***2180*** *= 2 @ 180°*
- ☐ **RPTA-(XXX)-HIB** Round Pole Tenon Adapter
  Specify mounting configuration: ***190*** *= 1 @ 90°;* ***290*** *= 2 @ 90°;* ***390*** *= 3 @ 90°;* ***490*** *= 4 @ 90°;* ***2180*** *= 2 @ 180°;* ***2120*** *= 2 @ 120°;* ***3120*** *= 3 @ 120°*

OPTIONS

- ☐ **RETRO** Retrofit Switching Kit

FINISH

- ☐ **TBK** Textured Black
- ☐ **TDB** Textured Dark Bronze
- ☐ **TSA** Textured Satin Aluminum
- ☐ **TWHT** Textured White
- ☐ **TGN** Textured Green
- ☐ **TGR** Textured Gray
- ☐ **RAL(*)** Specify Custom RAL color number

ACCESSORIES

- ☐ **HSS** House Side Shield
- ☐ **C2C** Cradle to Cradle Product Recycling Assistance Program

Wide-Lite is a Philips group brand
1611 Clovis Barker Road
San Marcos, TX 78666-5177
Phone: 512.392.5821
Fax: 512.753.1122

Wide-Lite reserves the right to change specifications and dimensions without notice.
Lamp and electrical specifications / availability subject to change by manufacturer without notice.
Please refer to detailed specification sheets for additional information and spec details.

Bulletin No. WLSP0279B0509