Columbia
LIGHTING

BIL4

Bi-Level Luminaire with Controls / 2-Lamp T8

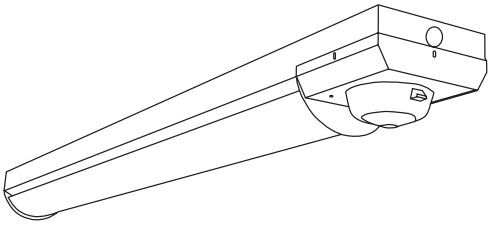

PROJECT INFORMATION

Project Name _____ Type _____

Catalog No. _____ Date _____

FEATURES

- Energy saving luminaire with integrated occupancy controls
- Bi-level light control offers safety and security
- Ideal for stairwells, parking structures, restrooms and areas where maximum light levels are not needed when area is unoccupied
- Contains a single low wattage 2' T8 lamp for constant light output while the 4' T8 lamps are controlled by an integral occupancy/daylight harvesting sensor
- White aluminum body allows for greater heat dissipation
- Tool-less access to ballast for ease of maintenance
- Can be surface mounted or suspended
- Multiple ballast options available for needed energy savings and light output
- Fail safe operation switches light level to 100% if sensor is damaged
- Optional battery backup available for emergency egress applications

HOUSING
White Aluminum 0.032" thick fixture body

ELECTRICAL
Standard class "P," thermally protected, auto-resetting HPF ballast, sound rated A. All ballast leads extend a minimum of 6" through access location. NEC/CEC-compliant ballast disconnect is standard.

LENS
Highly efficient acrylic lens with a linear refractive pattern for even illumination and excellent lamp obscuration.

OCCUPANCY SENSOR
Hubbell Building Automation Internally mounted Passive Infrared Occupancy/Daylight Harvesting sensor. Fail-safe feature will switch light level to 100% if the sensor is damaged. LED indicator for easy verification of coverage. Lens has a 1500 square-foot, 360° coverage area at a mounting height of 10 ft, and a 2:1 radius to height ratio coverage pattern. Sensor includes an adjustable time delay, and motion/photocell sensitivity.

CERTIFICATION
All luminaires are built to UL 1598 standards and bear appropriate UL and cUL or CSA labels. Damp location labeling is standard.

ORDERING INFORMATION

EXAMPLE BIL4-232-EPLWU

BIL	4	–	2	32	–		U	–	BL-PCB
MODEL	**SIZE**		**LAMPS IN CROSS SECTION**	**LAMP TYPE**		**PRIMARY BALLAST**	**VOLTAGE**		**OPTIONS**
BIL Bi-Level Luminaire	**4** 4'		**2** Two	**32** 4', T8: 32, 30, 28, or 25 Watt and 2', T8: 17 Watt		**EP** Electronic T8, Programmed Start, 0.88 BF **EPLW** Electronic T8, Programmed Start, 0.77 BF **EPHL** Electronic T8, Programmed Start, 1.18 BF	**U** 120V-277V		**EL** Emergency Battery Pack, 2' lamp 500 lumens **F0730** T8 Lamps Installed, 75 CRI, 3000K **F0735** T8 Lamps Installed, 75 CRI, 3500K **F0830** T8 Lamps Installed, 82 CRI, 3000K **F0835** T8 Lamps Installed, 82 CRI, 3500K **NYC** NYC Compliant **NYCU** NYC Compliant, Union Labeled

	UNOCCUPIED		OCCUPIED	
	(1) 17 WATT T8 LAMP		(1) 17 WATT T8 LAMP & (2) 32 WATT T8 LAMPS	
Ballast Type	**Watts**	**Lumens**	**Watts**	**Lumens**
EP (0.88 BF)	15	989	74	4669
EPLW (0.77 BF)	15	989	62	4208
EPHL (1.18 BF)	15	989	90	5170

© 2009 Columbia Lighting, a division of Hubbell Lighting, Inc. Because of continuing product improvement programs, Columbia Lighting reserves the right to change specifications without notice. 701 Millennium Blvd. Greenville, SC 29607 / Tel **864.678.1000** / Tech Support **864.678.1668** / Website **www.columbialighting.com**

Hubbell Lighting, Inc.

PHOTOMETRIC DATA

Test **RWS-3-1x4-1L17-2L32-M4-CA-PHa** Test Date **3/19/08**

LUMINAIRE DATA

Luminaire	**BIL4-232-EPHLU** **Photometry based on Photopia software simulation. For relative photometry contact Columbia Lighting. Miro 4 Reflector Acrylic Lens**
Ballast	**Electronic T8**
Ballast Factor	**1.00**
Lamp	**F32T8**
Lumens per Lamp	**2383**
Watts	**100**
Shielding Angle	**N/A**
Spacing Criterion	**0º= 1.27** **90º = 1.41**
Luminous Opening in Feet	**Length: 3.99** **Width: 0.50** **Height: 0.34**

ZONAL LUMEN SUMMARY

Zone	Lumens	%Lamp	%Fixt.
0-30	1041	14.6	20.1
0-40	1742	24.4	33.7
0-60	3241	45.3	62.6
0-90	4599	64.3	88.9
0-180	5175	72.4	100.0

ENERGY DATA

Total Luminaire Efficiency	**72.4%**
Luminaire Efficacy Rating (LER)	**N/A**
IESNA RP-1-1993 Compliance	**Noncompliant**
Comparative Yearly Lighting Energy Cost per 1000 Lumens	**$N/A based on 3000 hrs. and $.08 per KWH**

COEFFICIENTS OF UTILIZATION (%)

RCR	RC	80				70				50			0
	RW	70	50	30	10	70	50	30	10	50	30	10	0
	1	75	71	67	64	72	69	65	62	64	61	59	50
	2	68	61	56	51	65	59	54	50	55	51	47	41
	3	61	53	47	42	59	51	46	41	48	43	39	34
	4	56	47	40	35	54	45	39	34	42	37	33	28
	5	51	42	35	30	49	40	34	29	38	32	28	24
	6	47	37	31	26	45	36	30	25	34	29	24	21
	7	44	34	27	23	42	33	27	22	31	25	21	18
	8	41	31	24	20	39	30	24	20	28	23	19	16
	9	38	28	22	18	36	27	21	18	26	21	17	15
	10	36	26	20	16	34	25	20	16	24	19	15	13

RCR = Room Cavity Ratio
RC = Effective Ceiling Cavity Reflectance **RW** = Wall Reflectance

INDOOR CANDELA PLOT

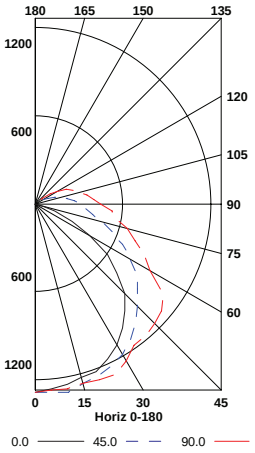

AVG. LUMINANCE (Candela/Sq. M.)

Average Luminance Angle	0.0	22.5	45.0	67.5	90.0
0	6950	6950	6950	6950	6950
30	6621	5988	5641	5575	5572
40	6291	5473	5170	5091	5247
45	6103	5055	4867	5060	5241
50	5589	4582	4639	5025	5245
55	5035	4122	4495	4911	5064
60	4053	3604	4167	4470	4504
65	3038	2933	3866	4216	4252
70	1809	2313	3605	3928	4006
75	941	1874	3224	3599	3816
80	522	1642	3058	3460	3622
85	267	1495	2954	3559	3726

DIMENSIONAL DATA

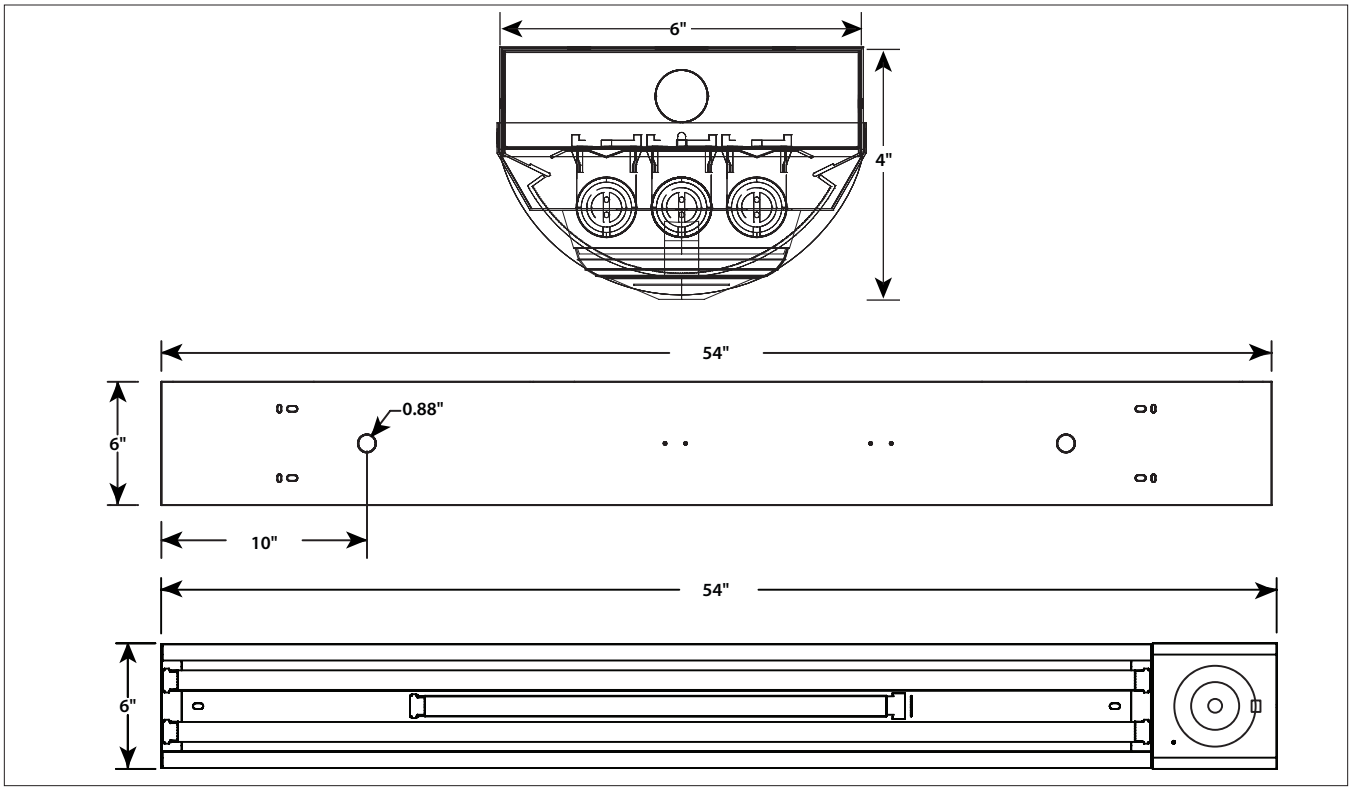

NOTE: All dimensions are in inches; dimensions and specifications are subject to change without notice. Please consult factory or check sample for verification.

© 2009 Columbia Lighting, a division of Hubbell Lighting, Inc. Because of continuing product improvement programs, Columbia Lighting reserves the right to change specifications without notice. 701 Millennium Blvd. Greenville, SC 29607 / Tel **864.678.1000** / Tech Support **864.678.1668** / Website **www.columbialighting.com**

Hubbell Lighting, Inc.