BLD-ARE-T3-DA The Edge™ LED Area Light – Type III

Rev. Date: 10/29/08

Beta Catalog Number: BLD - ARE - - DA - - LED-B - - -

Reset

Notes:

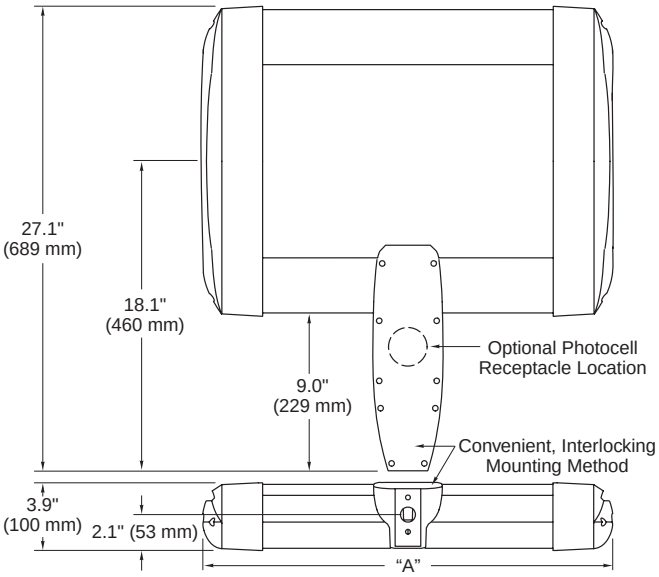

Product Family	Housing Indicator	Optics	Mounting	Initial Delivered Lumens (00's)	LED Performance	Voltage	Color Options
BLD	ARE	☐ T3[1] ☐ 3B[2]	DA[3]	☐ 017 ☐ 034 ☐ 051 ☐ 068 ☐ 085 ☐ 102 ☐ 119 ☐ 136 ☐ 153 ☐ 170 ☐ 187 ☐ 204	LED-B	☐ UL (120–277V Universal) ☐ UH (347–480V Universal) ☐ 12 ☐ 27 ☐ 34	☐ SV ☐ BZ ☐ BK ☐ WH ☐ PB

Factory-Installed Options

If choosing more than one option, please type in manually on the lines provided above.

EM–Emergency[4]
F–Fuse
HL–Hi/Low (175/350/525, dual circuit input)[5-8]
P–Photocell[6]
R–NEMA Photocell Receptacle
TL–2-Level (175/525 w/ integrated sensor control)[5,7]
TL1–2-Level (350/700 w/ integrated sensor control)[5,7]
TL2–2-Level (0/350 w/ integrated sensor control)[7,9,10]
TL3–2-Level (0/525 w/ integrated sensor control)[5,7]
TL4–2-Level (0/700 w/ integrated sensor control)[5,7]
35K–3500k Color Temperature[11]
43K–4300k Color Temperature[11]
525–525mA Drive Current[12]

Footnotes

1-IESNA Type III distribution
2-IESNA Type III distribution with backlight control
3-Direct mounting arm
4-Emergency mode delivers 1 light bar 350mA lumen output, consult LED Emergency Spec Sheet for further details
5-Available for 1-6 light bar fixtures
6-Must specify voltage other than UL or UH
7-Refer to multi level spec sheet for more information
8-Sensor not included
9-May be ordered with 525mA drive current
10-Available for 1-12 light bar fixtures
11-Color temperature per fixture
12-Driver operates at 525mA instead of the standard 350mA providing a higher lumen output and a shorter life

Output Multipliers

Color Temperature	Lumen Multiplier
6000K (Standard)	1.00
4300K	0.80
3500K	0.75

Ambient Temperature (ºC)	Lumen Multiplier
-20	1.11
10	1.04
25	1.00
40	0.96

Drive Current	Lumen Multiplier	Power Multiplier	L_{70} Life* (hours)
175mA	0.6	0.5	> 150,000
350mA (Standard)	1.0	1.0	> 150,000
525mA	1.3	1.5	70,000

** Based on fixture operating at 15º C. Refer to LED Ambient spec sheet.*

LED Performance Generation B Specs*

Light Bars	Initial Delivered Lumens – Type III Optic	Initial Delivered Lumens – Type III Optic w/ Backlight Shield	System Watts 120-277V	System Watts 347-480V	Dim. "A"/in.
1	1,750 (017)	1,160 (017)	28	30	11.75
2	3,500 (034)	2,320 (034)	55	59	11.75
3	5,250 (051)	3,480 (051)	79	84	13.75
4	7,000 (068)	4,640 (068)	104	109	15.75
5	8,750 (085)	5,800 (085)	128	133	17.75
6	10,500 (102)	6,960 (102)	153	156	19.75
7	12,250 (119)	8,120 (119)	183	194	21.75
8	14,000 (136)	9,280 (136)	207	218	23.75
9	15,750 (153)	10,440 (153)	232	242	25.75
10	17,500 (170)	11,600 (170)	257	266	27.75
11	19,250 (187)	12,760 (187)	281	290	29.75
12	21,000 (204)	13,920 (204)	306	313	31.75

** Based on 6000k color temperature fixture operating at 350mA and 25C Ambient.*

BLD-ARE-T3-DA The Edge™ LED Area Light – Type III

Rev. Date: 10/29/08

General Description
Slim, low profile design minimizes wind load requirements. Fixture sides are rugged cast aluminum with integral, weather-tight LED driver compartments and high performance aluminum heatsinks. Convenient, interlocking mounting method. Mounting housing is rugged die cast aluminum and mounts to 3 – 6" square or round pole. Fixture is secured by two (2) 5/16-18 UNC bolts spaced on 2" centers. Includes leaf/debris guard. Five year limited warranty on fixture.

Electrical
Modular design accommodates varied lighting output from high brightness, white, 6000K (+/- 500k per full fixture), minimum 75 CRI, long life LED sources. 120-277V 50/60 Hz, Class 1 LED drivers are standard. 347-480V 50/60 Hz driver is optional. LED drivers have power factor >90% and THD <20% of full load. Integral weather-tight electrical box with terminal strip for easy power hook-up.

Finish
Exclusive Colorfast DeltaGuard® finish features an E-Coat epoxy primer with an ultra-durable silver powder topcoat, providing excellent resistance to corrosion, ultraviolet degradation and abrasion. Bronze, black, white and platinum bronze powder topcoats are also available. The finish is covered by our 10 year limited warranty.

Labels
UL listed in the U.S. and Canada for wet locations and enclosure classified IP66 per IEC 529. Fixture also available with CE listing. RoHS compliant.

Patents
US Pat. D576,330; EC000693924; AU314711; AU314710; NZ408891; NZ408892; MX25801, CA Pat. Pend. German 20 2007 013 623.4. US and international patents pending. Design patents/regs. granted and pending.

Field-Installed Accessories

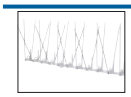

Bird Spikes
☐XA-BRDSPK

No Photo Available

NEMA Kit w/ Cover
☐XA-NEMA1

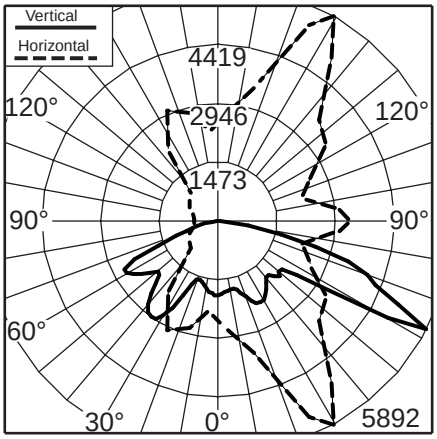

Independent Testing Laboratories certified test. Report No. ITL61147. Candlepower distribution curve of 6 light bar Type III LED luminaire with 10,500 initial delivered lumens operating at 350mA.

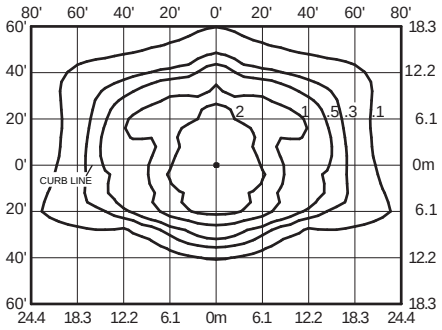

Isofootcandle plot of 6 light bar Type III LED luminaire at 20' A.F.G. Luminaire with 10,500 initial delivered lumens operating at 350mA. Initial FC at grade.

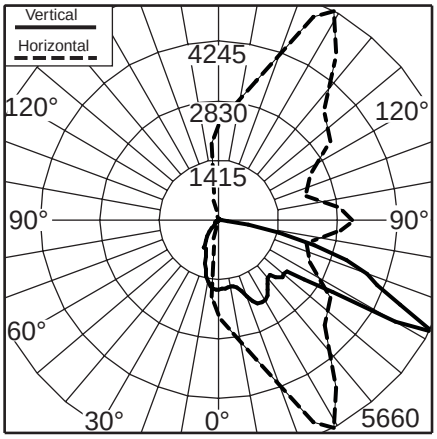

Independent Testing Laboratories certified test. Report No. ITL61148. Candlepower distribution curve of 6 light bar Type III LED luminaire with backlight control and 6,960 initial delivered lumens operating at 350mA.

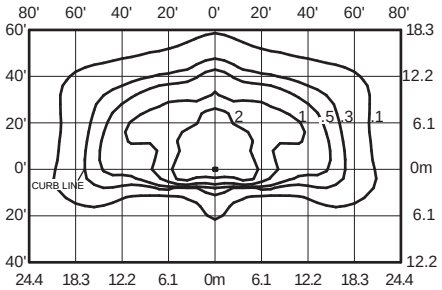

Isofootcandle plot of 6 light bar Type III LED luminaire with backlight control at 20' A.F.G. Luminaire with 6,960 initial delivered lumens operating at 350mA. Initial FC at grade.

LED Area Light EPA Calculations

	LIGHT BARS										
	2	3	4	5	6	7	8	9	10	11	12
Fixed Arm Mount											
1 fixture	0.60	0.60	0.60	0.60	0.60	0.60	0.60	0.60	0.61	0.65	0.69
2 fixtures (180°)	1.20	1.20	1.20	1.20	1.20	1.20	1.20	1.20	1.21	1.29	1.38
2 fixtures (90°)	0.87	0.92	0.96	1.00	1.04	1.08	1.12	n/a	n/a	n/a	n/a
3 fixtures (90°)	1.47	1.51	1.55	1.60	1.64	1.68	1.72	n/a	n/a	n/a	n/a
4 fixtures (90°)	1.75	1.83	1.91	2.00	2.08	2.16	2.24	n/a	n/a	n/a	n/a

beta LED

Beta LED • 1200 92nd Street • Sturtevant, WI 53177 • 800-236-6800 • www.BetaLED.com