EverLast® Induction Lighting EGF-EC-100W-BL

- Wattage: 100w/50w when dimmed
- Lamp Life Rating: 100,000 hours
- Ballast Life Rating: 60,000 hours
- CCT: 5000k
- CRI: 82-85
- IP Rating: IP43
- Vibration & Shock Resistance: Excellent
- Applications: Parking garages, gas stations, schools, shopping malls

Specifications

Lamp

Wattage (W)	Lumens (LM)	CRI	CCT (Kelvin)	Rated Life (Hours)
100	8400/4200	82-85	5000	100,000

Ballast

Max Input Power (W)	Input Voltage (V)	Max Input Current (A)	Input Freq. (Hz)	Power Factor (PF)	Operating Temp. (°F)	THD (%)
105	120-277/480	0.93-0.42	50/60	>.95	-30 to 130	<10

Physical Specifications

- **Die cast aluminum housing with gray, bronze, black or white powder coat finish**
- **UV stabilized, heat resistant polycarbonate lens**
- **Light weight and compact structure for easy maintenance**
- **Step-dimming ballast for use with sensors for additional energy savings**
- **Fixture operates at 50% power until sensor is triggered, then fixture switches to 100% power**
- **Electronic ballast with high power factor**

EverLast® Lighting A Product of Full Spectrum Solutions, Inc. 2009, All Rights Reserved

EverLast® Induction Lighting EGF-EC-100W-BL

Dimensions

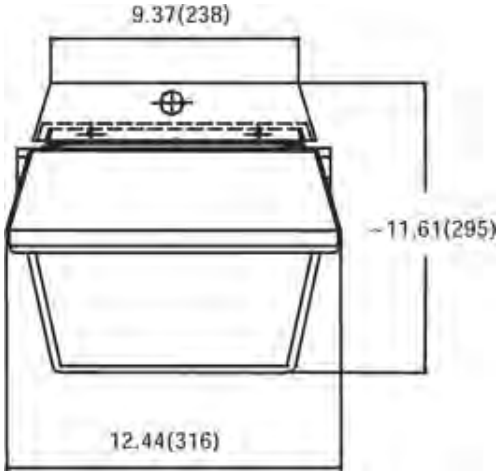

Photometric Data

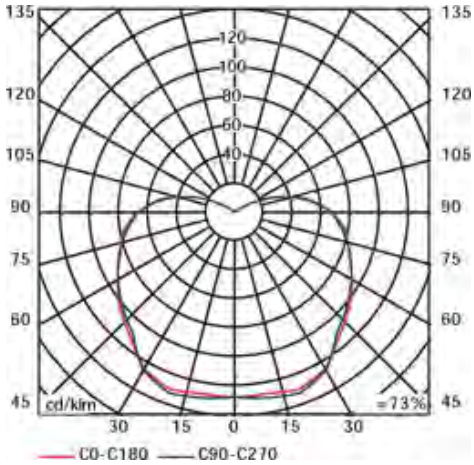

EverLast® Terms and Conditions of 10 year limited warranty

EverLast® Induction Lighting warrants that our fixtures, ballasts, and lamps will be free from defects in materials and workmanship for a period of ten (10) years or 60,000 hours (whichever comes first) from date of installation or date of manufacture if installation date is unknown. Ballasts, lamps, fixtures demonstrated to be defective within the warranty period will be repaired or replaced at EverLast® Induction Lightings discretion, at no cost provided the fixtures are installed and operated in accordance with manufacturer's recommendations. This warranty applies only to the original purchaser, for fixtures used within the US, Canada, or other countries as specified by EverLast® Induction Lighting. The warranty is non-transferable. EverLast® Induction Lighting reserves the right to examine all failed induction lighting systems and reserves the right to be the sole judge as to whether any housing, lamp and/or ballast is defective and covered under this warranty

To view the full terms and conditions please visit the EverLast® website here.

EverLast® Lighting A Product of Full Spectrum Solutions, Inc. 2009, All Rights Reserved