HYDREL

PATHWAY LIGHTING

3100 SERIES

LOUVERED BOLLARD

The Hydrel 3100 Series

Low Level Area Lighting

The 3100 Series Bollard provides simplified geometric forms that will both compliment and blend with a variety of architectural settings. Rugged in design and functional in performance, these bollards will meet even the most demanding installation requirements.

When long term durability and ease of installation is what's needed in a bollard, Hydrel can fill the need. Interlocking louvers, extruded aluminum pillar, and welded cast aluminum mounting plates are the key to the 3100 series success. A patented 6-point internal level/mount technology makes the external mounting screws and leveling methods of existing bollards obsolete.

A performance based louver system utilizing a low glare upper surface combined with a high reflectance lower surface maximizes light output while reducing offensive glare common in most bollards.

PERFORMANCE

A remarkable blend of DESIGN + PERFORMANCE makes the 3100 Series Bollard an excellent lighting solution for pathway applications. Light patterns are wide and pleasingly uniform. Structural integrity is unmatched, and the use of superior materials and long-lasting finish promises decades of use with minimal maintenance. Rugged reliability is a Hydrel trademark, and the 3100 Series bollard is no exception.

The architectural design and customizable aesthetic options combine with the superior optical and mechanical performance that Hydrel is known for without compromise. The 3100 Louver Bollard blends with similar geometric forms as a low level lighting fixture.

Superior Performance

Vandal Resistant Base
Extruded aluminum pillar welded to top and bottom plates provide maximum structural integrity.

Durable Louver Assembly
Interlocking diecast aluminum louvers provide impact resistant assembly.

Ease of Installation
Removable access door creates easy access to patented 6-point internal level mount system and wire splice make-up.

Convenient Ballast Access
Ballast lift allows for easy component maintenance and wattage exchange.

Increased Efficiency
High reflectance white finish on underside of louvers optimizes performance and increases pathway light levels.

IES Cutoff and Reduced Glare
Standard matte black finish on topside of louvers creates cutoff distribution and minimizes glare.

Optional Forward Throw Distribution
Forward throw reflector redirects backlight increasing performance by 50%.

Image shows the access door held in place by two allen head screws. Once the door is removed, the mounting bolts, levelers, and wire splice connections can be conveniently accessed.

The ballast can be accessed by loosening two bolts located just underneath the lift. Once the bolts are loosened, the ballast tray will slide down into the access door opening for maintenance and/or repair of all components.

DISTRIBUTION

Extensive testing assures that aggressive contact by pedestrians will not weaken or noticeably damage a 3100 bollard.

Directional light patterns can be independently aimed, allowing bollards to be aligned parallel or perpendicular to paths and stairways.

Premium corrosion resistant materials and powder coated finishes shrug off environmental contamination. Even in corrosive coastal areas, the 3100 bollard maintains it's original appearance over many years of use.

Typical Applications

Forward FT Distribution

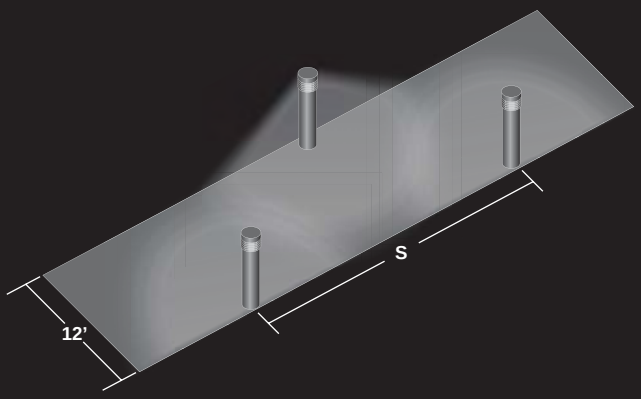

Symmetric SYM Distribution

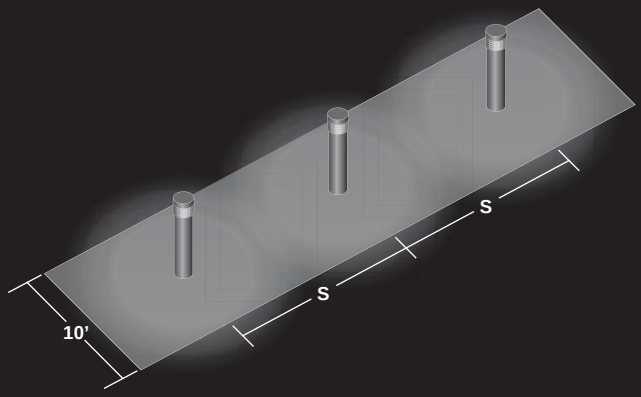

Staggered on 12' path

Lamp	Lumens	E min	E ave	Spacing (S)
100HPS	8800	1.2 fc	6.2 fc	40 ft
100CMH	8800	1.0 fc	6.0 fc	40 ft
100MH	7900	0.9 fc	5.2 fc	40 ft
70HPS	5800	1.5 fc	5.5 fc	32 ft
70CMH	5800	1.4 fc	5.3 fc	32 ft
70MH	4700	1.1 fc	4.3 fc	32 ft
50HPS	3700	1.3 fc	4.3 fc	24 ft
50CMH	3800	1.2 fc	4.3 fc	24 ft
50MH	3200	1.0 fc	3.6 fc	24 ft
42TRT	3200	1.0 fc	3.3 fc	24 ft
32TRT	2400	1.1 fc	3.4 fc	20 ft
26DTT	1800	1.0 fc	2.8 fc	16 ft

Centered on 10' path

Lamp	Lumens	E min	E ave	Spacing (S)
100HPS	8800	1.2 fc	6.0 fc	22 ft
100CMH	8800	1.0 fc	5.9 fc	22 ft
100MH	7900	0.9 fc	5.3 fc	22 ft
70HPS	5800	1.4 fc	4.8 fc	18 ft
70CMH	5800	1.4 fc	4.8 fc	18 ft
70MH	4700	1.1 fc	3.8 fc	18 ft
50HPS	3700	1.2 fc	3.4 fc	16 ft
50CMH	3800	1.2 fc	3.5 fc	16 ft
50MH	3200	1.0 fc	2.9 fc	16 ft
42TRT	3200	0.9 fc	2.7 fc	16 ft
32TRT	2400	1.0 fc	2.4 fc	14 ft
26DTT	1800	1.0 fc	2.0 fc	12 ft

Notes:
1. For wider paths, decrease fixture spacing. For lower light levels, decrease lamp wattage.
2. To calculate maintained illuminance, multiply values by appropriate light loss factor.
3. All HID lamps are coated.
4. Values shown are for 3100 42". Please visit www.hydrel.com for complete photometric data.

SPECIFICATION

FIXTURES

Available in four different designs.

Two standard sizes: 36" w/ 30" light center height and 42" w/ 36" light center height.

Two distributions SYM and FT.
FT includes a forward throw reflector.

All standard and custom finishes are available.

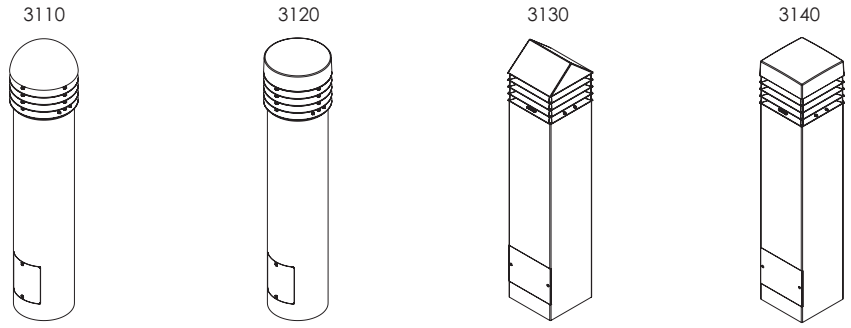

DIMENSIONS

MATERIALS

Premium low copper content A360 alloy die-cast aluminum top housing and louvers. Extruded and tempered aluminum pillar with internal cast aluminum mounting plates. Borosilicate glass lamp enclosure, silicone gasketed. Stainless steel fasteners.

FINISH

TGIC polyester powder coated in a range of textured semi-matte finishes. Louvers are powder coated matte black on topside and high reflectance white on underside.

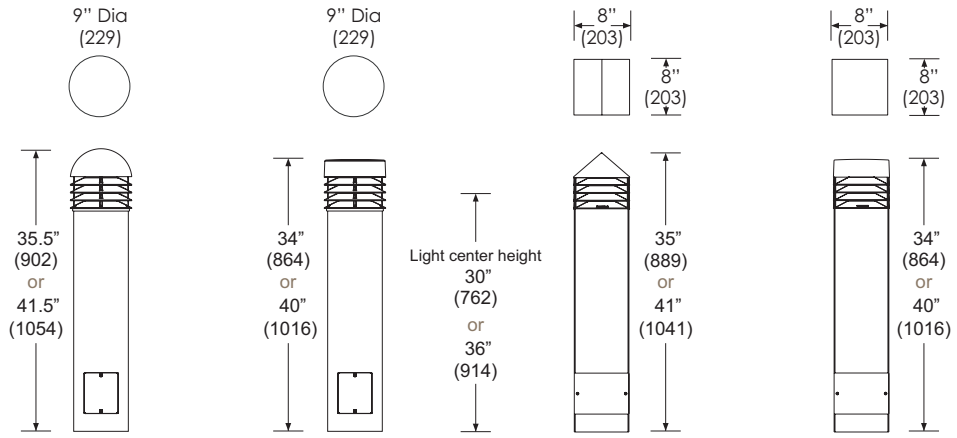

MOUNTING

To ensure structural integrity, the 3100 bollard avoids traditional set-screw mounting. Instead, a heavy duty cast aluminum mounting plate is internally welded to the base. Slotted anchor bolt holes and three easily accessible leveling pads allow the luminaire to be installed in perfect alignment. Anchor bolt information and installation instructions are available at www.hydrel.com.

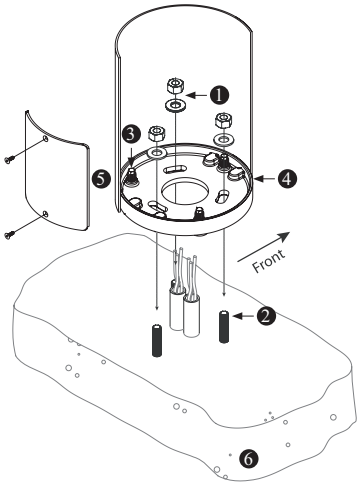

HYDREL PATENTED 6-POINT BOLLARD MOUNTING

1. Anchor bolt nut and lock washer tightening pre-loads the anchor bolts and levelers resulting in a stronger bollard mounting
2. Anchor bolts, independent of levelers, thru slots in welded-in base plate
3. Drive on top of leveler allows leveler to be screwed up or down
4. Base plate welded to post
5. Hand-hole allows access to levelers, anchor bolts, and wiring, enabling entire bollard to be installed as a complete unit
6. Concrete foundation

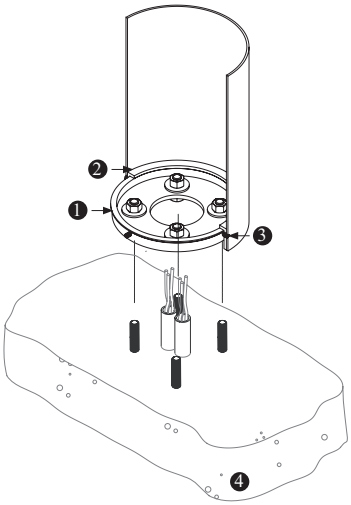

TYPICAL COMPETITIVE BOLLARD MOUNTING

1. Base casting suspended between nuts and flat washers over anchor bolts. No pre-load on anchor bolts. Base plate must be leveled prior to installing fixture post/head
2. Bollard post casting resting flush on top of base casting
3. Hex socket set screws thru bollard post into base casting
4. Concrete foundation

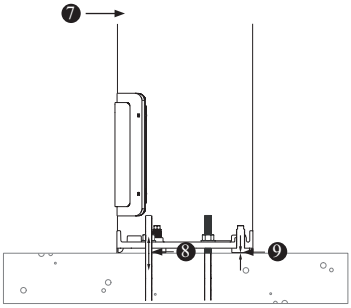

7. Side loading of bollard base transfers to pre-loaded anchor bolts, levelers, and welded base plate. Side loading increases the linear tension on the anchor bolts and levelers maintaining a rigid mounting
8. Pre-loading of anchor bolts in linear tension
9. Pre-loading of levelers in linear compression with concrete foundation

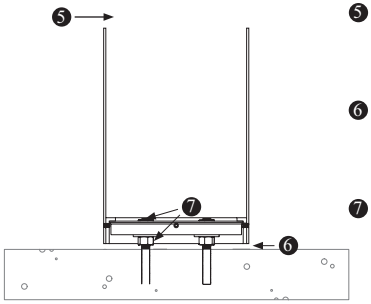

5. Side loading of bollard base transfers to set screws often resulting in set screw and mounting base failures
6. Gap between bollard post and concrete foundation allows bollard to be rocked back and fourth
7. Nut and flat washer, top and bottom, levels and suspends base casting

HYDREL

An AcuityBrands Company

IP65

3110 LED
LOUVER BOLLARD ROUND DOME

TYPE	JOB NAME

PART NUMBER

Product	Height	Lamp Type	Voltage	Distribution	Options	Lamp	Finish	List

DESCRIPTION

The 3110 BOLLARD is a low level area lighting luminaire that combines visual appeal with superior performance and unequalled quality. It is designed to work in building perimeter areas and public spaces completing a wide variety of architectural styles.

Superior performance extends to the detailed finish of the louvers. Matte black finish of top surface provides IES cut off performance while gloss white on bottom extends reflective light to economize on spacing of fixtures. Custom finish available on top louver surface.

The 3110 BOLLARD offers a patented impact resistant mounting and leveling design ensuring life long performance. Four levelling pads within the base mounting plate are easily accessible through the access panel. The levelling pads provide ***full*** contact with the concrete pad, providing a high degree of stability. The base mounting plate is fully welded to the bollard post, providing complete structural support from all directions, giving the bollard superior vandal resistance.

Motion Sensing Bi-Level Switching (BLS option) is now possible through the use of a fixture-integrated microwave occupancy sensor. Mounted in the head of the fixture, within the sealed light engine compartment, the sensor is protected from moisture damage, as well as potential damage due to vandalism. The sensor provides up to 20' of motion coverage in the 360 deg area around the bollard (see diagram on the next page). When motion is detected bollard will illuminate at full output (60 Watts). After approx 5 min, bollard will drop to 1/3 full output (20 Watts).

FEATURES & SPECIFICATIONS

MATERIAL: Copper-free Aluminum, A360.

LED ARRAY: 60.3W (total system input wattage)

VOLTAGE: MVOLT 50/60Hz

DISTRIBUTION: **SYM** - Symmetric, **FT** - Forward Throw

LENS: Frosted Borosilicate Glass.

BALLAST: Integrally mounted LED driver with operating temperature of -30° to 60°C.

FASTENERS: Stainless Steel.

FINISH: See ordering guide

LISTINGS: CSA_{US}, CSA

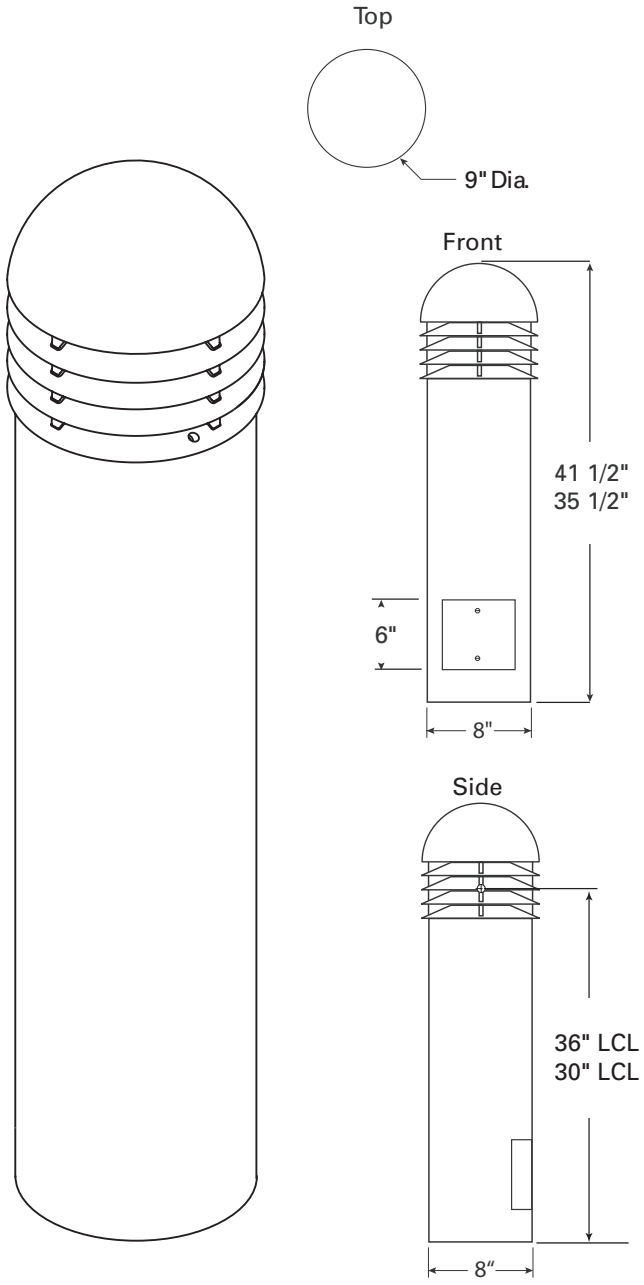

APPROVALS

NOTE: HYDREL RESERVES THE RIGHT TO MODIFY SPECIFICATION WITHOUT NOTICE. Any dimension on this sheet is to be assumed as a reference dimension: "Used for information purposes only. It does not govern manufacturing or inspection requirements." (ANSI Y14.5-1973)

©2010 Acuity Brands Lighting, Inc.
5/18/10
3110 RLB LED

20660 Nordhoff St., Suite B
Chatsworth, CA 91311
Phone: 866.533.9901
Fax: 866.533.5291
www.hydrel.com

HYDREL
An Acuity Brands Company

IP65

3110 BOLLARD ORDERING INFORMATION

50/60 Hz Application

Choose the boldface catalog nomenclature that best suits your needs.

PART NO.

_____ ___ _____ _____ _____ _____ _____ _____

EXAMPLE:

3110 36 LED WHT53K MVOLT SYM BL

Product

- ☐ **3110**

Height

- ☐ **36**
- ☐ **42**

LED Array

- ☐ **LED**

Color

- ☐ **WHT53K** 5300°K Color Temp
- ☐ **WHT30K** 3000°K Color Temp

Voltage

- ☐ **MVOLT**
- ☐ **120**[2]
- ☐ **277**[2]

Distribution

- ☐ **SYM** Symetrical, 360°
- ☐ **FT** Forward Throw

Options[4]

- ☐ **BLS** Bi-Level Switching (Motion Activated)
- ☐ **GFCI**[3] Receptacle
- ☐ **ELN** Emergency Operation (1000 lumen output)

Finish

- ☐ **BL** Black
- ☐ **BZ** Bronze
- ☐ **DDB** Dark Bronze
- ☐ **DNA** Natural Aluminum
- ☐ **GN** Green
- ☐ **GR** Gray
- ☐ **SND** Sand
- ☐ **STG** Steel Gray
- ☐ **TVG** Terra Verde Green
- ☐ **WH** White
- ☐ **CF** Custom Finish

Optional Louvers Painted[1]

- ☐ **___/PL** Louvers painted to match fixture (top only)

APPROXIMATE MOTION SENSOR COVERAGE AREA:

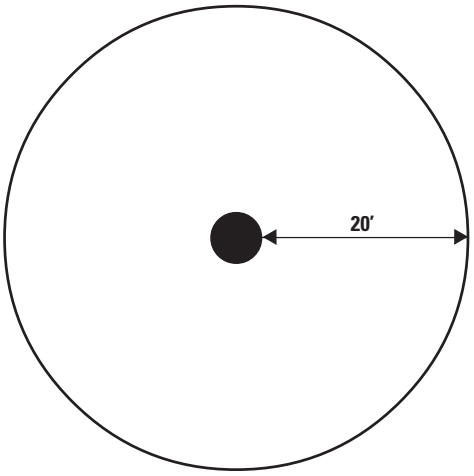

LIGHT ENGINE SPECIFICATIONS

COLOR	TYPE	COLOR TEMP	QTY / FIXTURE	LUMENS / WATT	INPUT WATTS
WHT53K	Nichia	5300°K	16	90.2	60.3
WHT30K	Nichia	3000°K	16	66.3	60.3

Notes:

[1] Louvers will be black unless otherwise specified (top only).
[2] Only valid with ELN or BLS.
[3] Only valid with 120 Volt.
[4] Options not valid with 50Hz.

©2010 Acuity Brands Lighting, Inc.
5/18/10
3110 RLB LED

20660 Nordhoff St., Suite B
Chatsworth, CA 91311
Phone: 866.533.9901
Fax: 866.533.5291
www.hydrel.com

HYDREL

An AcuityBrands Company

IP65

3120 LED
ROUND LOUVER BOLLARD FLAT

TYPE	JOB NAME
PART NUMBER	

Product	Height	Lamp Type	Voltage	Distribution	Options	Lamp	Finish	List

DESCRIPTION

The 3120 BOLLARD is a low level area lighting luminaire that combines visual appeal with superior performance and unequalled quality. It is designed to work in building perimeter areas and public spaces completing a wide variety of architectural styles.

Superior performance extends to the detailed finish of the louvers. Matte black finish of top surface provides IES cut off performance while gloss white on bottom extends reflective light to economize on spacing of fixtures. Custom finish available on top louver surface.

The 3120 BOLLARD offers a patented impact resistant mounting and leveling design ensuring life long performance. Four levelling pads within the base mounting plate are easily accessible through the access panel. The levelling pads provide ***full*** contact with the concrete pad, providing a high degree of stability. The base mounting plate is fully welded to the bollard post, providing complete structural support from all directions, giving the bollard superior vandal resistance.

Motion Sensing Bi-Level Switching (BLS option) is now possible through the use of a fixture-integrated microwave occupancy sensor. Mounted in the head of the fixture, within the sealed light engine compartment, the sensor is protected from moisture damage, as well as potential damage due to vandalism. The sensor provides up to 20' of motion coverage in the 360 deg area around the bollard (see diagram on the next page). When motion is detected bollard will illuminate at full output (60 Watts). After approx 5 min, bollard will drop to 1/3 full output (20 Watts).

FEATURES & SPECIFICATIONS

MATERIAL: Copper-free Aluminum, A360.

LED ARRAY: 60.3W (total system input wattage)

VOLTAGE: MVOLT 50/60Hz

DISTRIBUTION: **SYM** - Symmetric, **FT** - Forward Throw

LENS: Frosted Borosilicate Glass.

BALLAST: Integrally mounted LED driver with operating temperature of -30° to 60°C.

FASTENERS: Stainless Steel.

FINISH: See ordering guide

LISTINGS: CSA_{US}, CSA

NOTE: HYDREL RESERVES THE RIGHT TO MODIFY SPECIFICATION WITHOUT NOTICE. Any dimension on this sheet is to be assumed as a reference dimension: "Used for information purposes only. It does not govern manufacturing or inspection requirements." (ANSI Y14.5-1973)

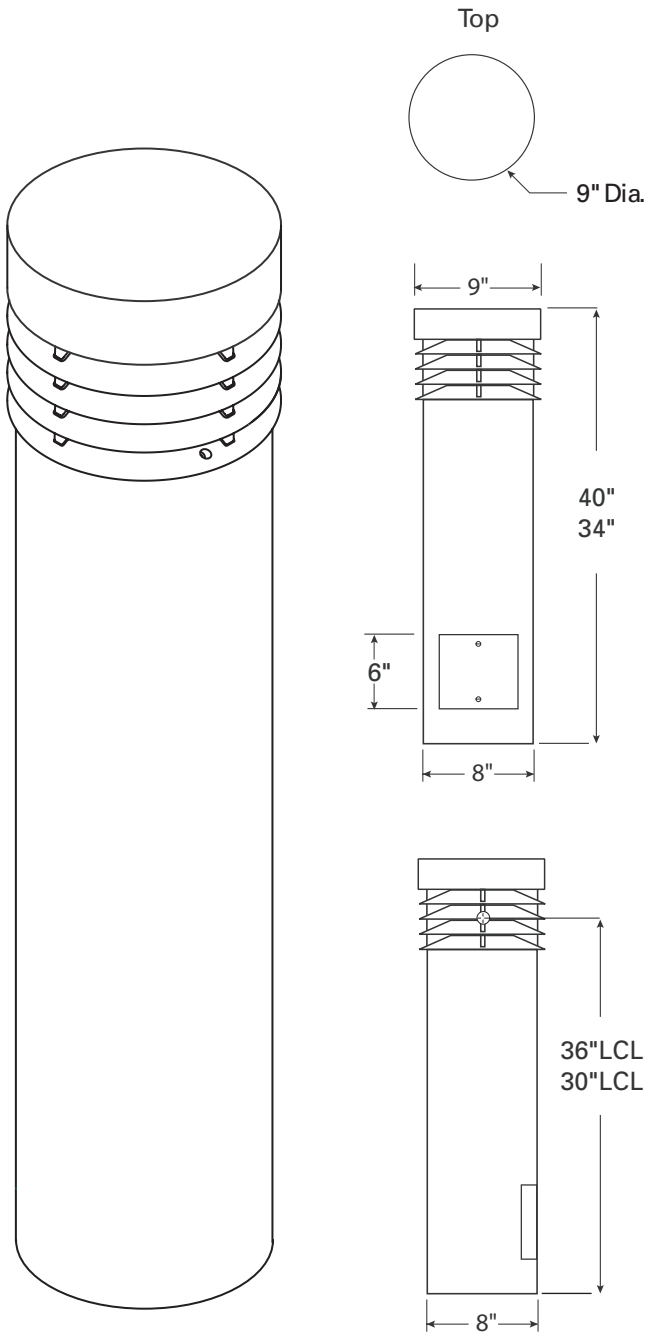

APPROVALS

©2010 Acuity Brands Lighting, Inc.
5/18/10
3120 RLB LED

20660 Nordhoff St., Suite B
Chatsworth, CA 91311
Phone: 866.533.9901
Fax: 866.533.5291
www.hydrel.com

HYDREL
An Acuity Brands Company

IP65

3120 BOLLARD ORDERING INFORMATION

50/60 Hz Application

Choose the boldface catalog nomenclature that best suits your needs.

PART NO.

_____ ___ _____ _____ _____ _____ _____ _____

EXAMPLE:

3120 36 LED WHT53K MVOLT SYM BL

Product

- ☐ **3120**

Height

- ☐ **36**
- ☐ **42**

LED Array

- ☐ **LED**

Color

- ☐ **WHT53K** 5300°K Color Temp
- ☐ **WHT30K** 3000°K Color Temp

Voltage

- ☐ **MVOLT**
- ☐ **120**[2]
- ☐ **277**[2]

Distribution

- ☐ **SYM** Symetrical, 360°
- ☐ **FT** Forward Throw

Options[4]

- ☐ **BLS** Bi-Level Switching (Motion Activated)
- ☐ **GFCI**[3] Receptacle
- ☐ **ELN** Emergency Operation (1000 lumen output)

Finish

- ☐ **BL** Black
- ☐ **BZ** Bronze
- ☐ **DDB** Dark Bronze
- ☐ **DNA** Natural Aluminum
- ☐ **GN** Green
- ☐ **GR** Gray
- ☐ **SND** Sand
- ☐ **STG** Steel Gray
- ☐ **TVG** Terra Verde Green
- ☐ **WH** White
- ☐ **CF** Custom Finish

Optional Louvers Painted[1]

- ☐ ___/**PL** Louvers painted to match fixture (top only)

APPROXIMATE MOTION SENSOR COVERAGE AREA:

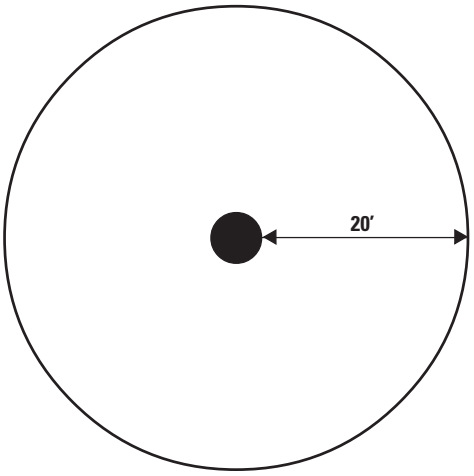

LIGHT ENGINE SPECIFICATIONS

COLOR	TYPE	COLOR TEMP	QTY / FIXTURE	LUMENS / WATT	INPUT WATTS
WHT53K	Nichia	5300°K	16	90.2	60.3
WHT30K	Nichia	3000°K	16	66.3	60.3

Notes:

[1] Louvers will be black unless otherwise specified (top only).
[2] Only valid with ELN or BLS.
[3] Only valid with 120 Volt.
[4] Options not valid with 50Hz.

©2010 Acuity Brands Lighting, Inc.

20660 Nordhoff St., Suite B
Chatsworth, CA 91311
Phone: 866.533.9901
Fax: 866.533.5291
www.hydrel.com

HYDREL

An AcuityBrands Company

IP65

3130 LED
SQUARE LOUVERED BOLLARD WEDGE

TYPE	JOB NAME

PART NUMBER

Product	Height	Lamp Type	Voltage	Distribution	Options	Lamp	Finish	List

DESCRIPTION

The 3130 BOLLARD is a low level area lighting luminaire that combines visual appeal with superior performance and unequalled quality. It is designed to work in building perimeter areas and public spaces completing a wide variety of architectural styles.

Superior performance extends to the detailed finish of the louvers. Matte black finish of top surface provides IES cut off performance while gloss white on bottom extends reflective light to economize on spacing of fixtures. Custom finish available on top louver surface.

The 3130 BOLLARD offers a patented impact resistant mounting and leveling design ensuring life long performance. Four levelling pads within the base mounting plate are easily accessible through the access panel. The levelling pads provide ***full*** contact with the concrete pad, providing a high degree of stability. The base mounting plate is fully welded to the bollard post, providing complete structural support from all directions, giving the bollard superior vandal resistance.

Motion Sensing Bi-Level Switching (BLS option) is now possible through the use of a fixture-integrated microwave occupancy sensor. Mounted in the head of the fixture, within the sealed light engine compartment, the sensor is protected from moisture damage, as well as potential damage due to vandalism. The sensor provides up to 20' of motion coverage in the 360 deg area around the bollard (see diagram on the next page). When motion is detected bollard will illuminate at full output (60 Watts). After approx 5 min, bollard will drop to 1/3 full output (20 Watts).

FEATURES & SPECIFICATIONS

MATERIAL: Copper-free Aluminum A360.

LED ARRAY: 60.3W (total system input wattage)

VOLTAGE: MVOLT 50/60 Hz

DISTRIBUTION: **SYM** - Symmetric, **FT** - Forward Throw

LENS: Frosted Borosilicate Glass

BALLAST: Integrally mounted LED driver with operating temperature of -30° to 60°C.

FASTENERS: Stainless Steel.

FINISH: See ordering guide

LISTINGS: CSA_{US}, CSA

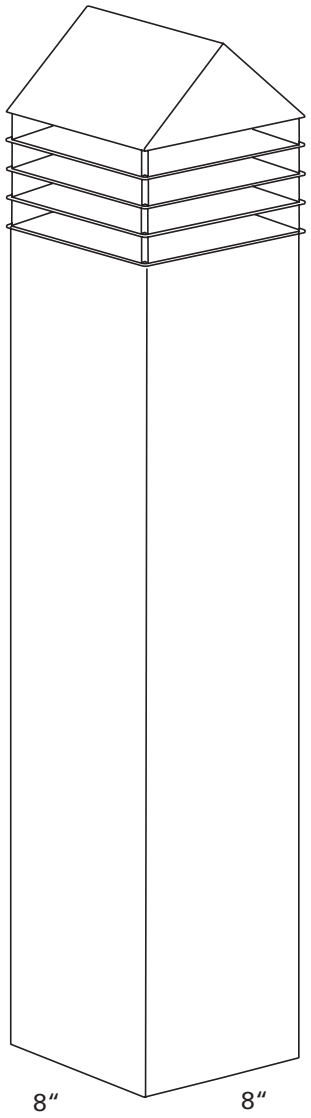

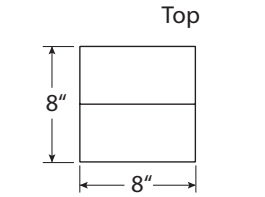

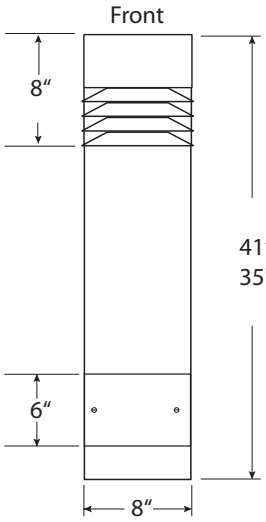

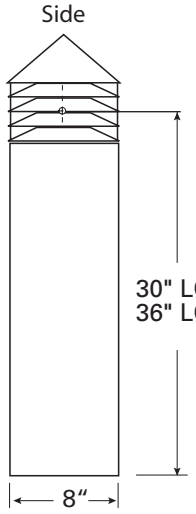

APPROVALS

NOTE: HYDREL RESERVES THE RIGHT TO MODIFY SPECIFICATION WITHOUT NOTICE. Any dimension on this sheet is to be assumed as a reference dimension: "Used for information purposes only. It does not govern manufacturing or inspection requirements." (ANSI Y14.5-1973)

©2010 Acuity Brands Lighting, Inc.

20660 Nordhoff St., Suite B
Chatsworth, CA 91311
Phone: 866.533.9901
Fax: 866.533.5291
www.hydrel.com

HYDREL
An Acuity Brands Company

IP65

3130 BOLLARD ORDERING INFORMATION

50/60 Hz Application

Choose the boldface catalog nomenclature that best suits your needs.

PART NO.

_____ _____ _____ _____ _____ _____ _____ _____

EXAMPLE:

3110	36	LED	WHT53K	MVOLT	SYM		BL

Product
- ☐ **3130**

Height
- ☐ **36**
- ☐ **42**

LED Array
- ☐ **LED**

Color
- ☐ **WHT53K** 5300°K Color Temp
- ☐ **WHT30K** 3000°K Color Temp

Voltage
- ☐ **MVOLT**
- ☐ **120**[2]
- ☐ **277**[2]

Distribution
- ☐ **SYM** Symetrical, 360°
- ☐ **FT** Forward Throw

Options[4]
- ☐ **BLS** Bi-Level Switching (Motion Activated)
- ☐ **GFCI**[3] Receptacle
- ☐ **ELN** Emergency Operation

Finish
- ☐ **BL** Black
- ☐ **BZ** Bronze
- ☐ **DDB** Dark Bronze
- ☐ **DNA** Natural Aluminum
- ☐ **GN** Green
- ☐ **GR** Gray
- ☐ **SND** Sand
- ☐ **STG** Steel Gray
- ☐ **TVG** Terra Verde Green
- ☐ **WH** White
- ☐ **CF** Custom Finish

Optional Louvers Painted[1]
- ☐ ___/**PL** Louvers painted to match fixture (top only)

APPROXIMATE MOTION SENSOR COVERAGE AREA:

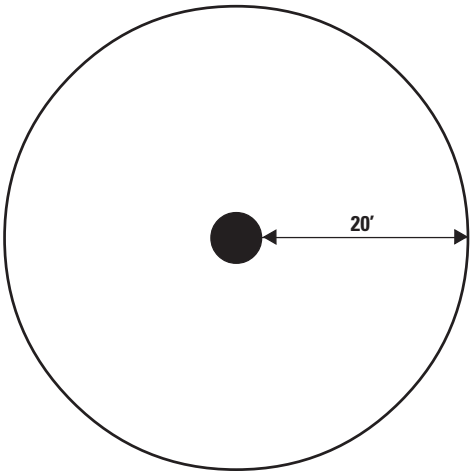

LIGHT ENGINE SPECIFICATIONS

COLOR	TYPE	COLOR TEMP	QTY / FIXTURE	LUMENS / WATT	INPUT WATTS
WHT53K	Nichia	5300°K	16	90.2	60.3
WHT30K	Nichia	3000°K	16	66.3	60.3

Notes:
[1] Louvers will be black unless otherwise specified (top only).
[2] Only valid with ELN or BLS.
[3] Only valid with 120 Volt.
[4] Options not valid with 50Hz.

©2010 Acuity Brands Lighting, Inc.
3/25/10
3130 LED SQLB

20660 Nordhoff St., Suite B
Chatsworth, CA 91311
Phone: 866.533.9901
Fax: 866.533.5291
www.hydrel.com

HYDREL

An AcuityBrands Company

IP65

3140 LED
SQUARE LOUVERED BOLLARD FLAT

TYPE	JOB NAME

PART NUMBER

Product	Height	Lamp Type	Voltage	Distribution	Options	Lamp	Finish	List

DESCRIPTION

The 3140 BOLLARD is a low level area lighting luminaire that combines visual appeal with superior performance and unequalled quality. It is designed to work in building perimeter areas and public spaces completing a wide variety of architectural styles.

Superior performance extends to the detailed finish of the louvers. Matte black finish of top surface provides IES cut off performance while gloss white on bottom extends reflective light to economize on spacing of fixtures. Custom finish available on top louver surface.

The 3140 BOLLARD offers a patented impact resistant mounting and leveling design ensuring life long performance. Four levelling pads within the base mounting plate are easily accessible through the access panel. The levelling pads provide ***full*** contact with the concrete pad, providing a high degree of stability. The base mounting plate is fully welded to the bollard post, providing complete structural support from all directions, giving the bollard superior vandal resistance.

Motion Sensing Bi-Level Switching (BLS option) is now possible through the use of a fixture-integrated microwave occupancy sensor. Mounted in the head of the fixture, within the sealed light engine compartment, the sensor is protected from moisture damage, as well as potential damage due to vandalism. The sensor provides up to 20' of motion coverage in the 360 deg area around the bollard (see diagram on the next page). When motion is detected bollard will illuminate at full output (60 Watts). After approx 5 min, bollard will drop to 1/3 full output (20 Watts).

FEATURES & SPECIFICATIONS

MATERIAL: Copper-free Aluminum A360.

LED ARRAY: 60.3W (total system input wattage)

VOLTAGE: MVOLT 50/60 Hz

DISTRIBUTION: **SYM** - Symmetric, **FT** - Forward Throw

LENS: Frosted Borosilicate Glass

BALLAST: Integrally mounted LED driver with operating temperature of -30° to 60°C.

FASTENERS: Stainless Steel.

FINISH: See ordering guide

LISTINGS: CSA_{US}, CSA

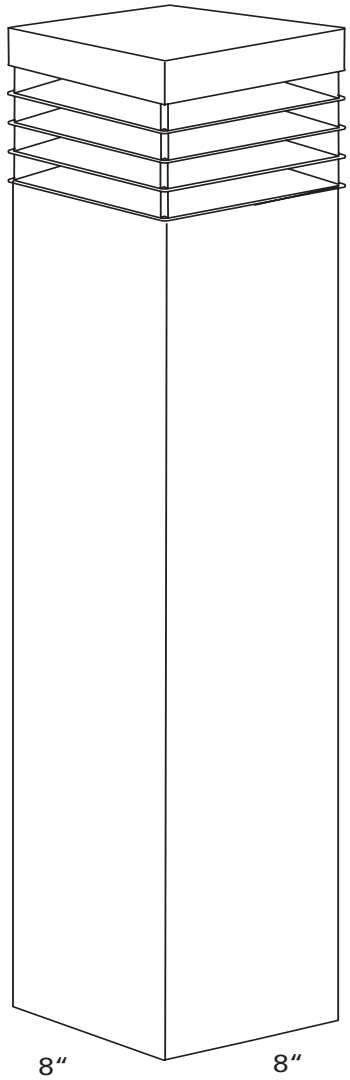

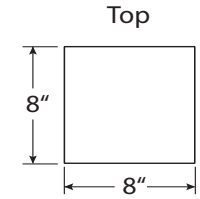

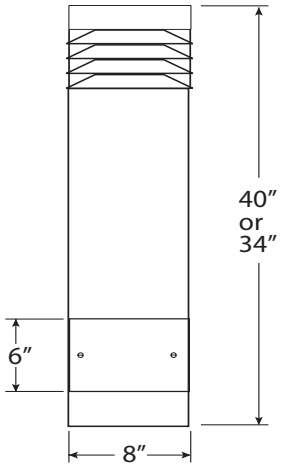

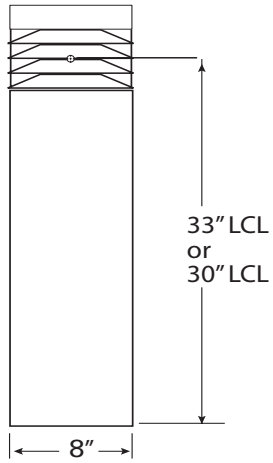

APPROVALS

NOTE: HYDREL RESERVES THE RIGHT TO MODIFY SPECIFICATION WITHOUT NOTICE. Any dimension on this sheet is to be assumed as a reference dimension: "Used for information purposes only. It does not govern manufacturing or inspection requirements." (ANSI Y14.5-1973)

©2010 Acuity Brands Lighting, Inc.
3/25/10
3140 LED SQLB

20660 Nordhoff St., Suite B
Chatsworth, CA 91311
Phone: 866.533.9901
Fax: 866.533.5291
www.hydrel.com

HYDREL
An Acuity Brands Company

IP65

3140 BOLLARD ORDERING INFORMATION

60 Hz Application

Choose the boldface catalog nomenclature that best suits your needs.

PART NO.

_____ _____ _____ _____ _____ _____ _____ _____

EXAMPLE:

3140	36	LED	WHT53K	MVOLT	SYM		BL

Product
- ☐ **3130**

Height
- ☐ **36**
- ☐ **42**

LED Array
- ☐ **LED**

Voltage
- ☐ **MVOLT**
- ☐ **120**[2]
- ☐ **277**[2]

Color
- ☐ **WHT53K** 5300°K Color Temp
- ☐ **WHT30K** 3000°K Color Temp

Distribution
- ☐ **SYM** Symetrical, 360°
- ☐ **FT** Forward Throw

Options[4]
- ☐ **BLS** Bi-Level Switching (Motion Activated)
- ☐ **GFCI**[3] Receptacle
- ☐ **ELN** Emergency Operation

Finish
- ☐ **BL** Black
- ☐ **BZ** Bronze
- ☐ **DDB** Dark Bronze
- ☐ **DNA** Natural Aluminum
- ☐ **GN** Green
- ☐ **GR** Gray
- ☐ **SND** Sand
- ☐ **STG** Steel Gray
- ☐ **TVG** Terra Verde Green
- ☐ **WH** White
- ☐ **CF** Custom Finish

Optional Louvers Painted[1]
- ☐ ___/**PL** Louvers painted to match fixture (top only)

APPROXIMATE MOTION SENSOR COVERAGE AREA:

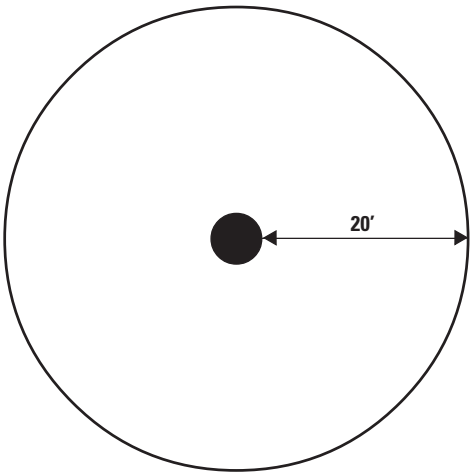

LIGHT ENGINE SPECIFICATIONS

COLOR	TYPE	COLOR TEMP	QTY / FIXTURE	LUMENS / WATT	INPUT WATTS
WHT53K	Nichia	5300°K	16	90.2	60.3
WHT30K	Nichia	3000°K	16	66.3	60.3

Notes:
[1] Louvers will be black unless otherwise specified (top only).
[2] Only valid with ELN or BLS.
[3] Only valid with 120 Volt.
[4] Options not valid with 50Hz.

©2010 Acuity Brands Lighting, Inc.
3/25/10
3140 LED SQLB

20660 Nordhoff St., Suite B
Chatsworth, CA 91311
Phone: 866.533.9901
Fax: 866.533.5291
www.hydrel.com

HYDREL

12881 Bradley Avenue, Sylmar, CA 91342
T 818.362.9465 F 818.362.6548
Email: custserv@hydrel.com
www.hydrel.com

An AcuityBrands Company

Form No. 106.28 5/06

©2006 Acuity Brands, Inc. All rights reserved. “Hydrel” is a trademark of Acuity Brands, Inc.